Copyright Information

Copyright © 2019 by LAUNCH TECH. CO., LTD. All rights reserved. No part of this publication may be reproduced, stored in a retrieval system, or transmitted in any form or by any means, electronic, mechanical, photocopying, recording or otherwise, without the prior written permission of LAUNCH.

Neither LAUNCH nor its affiliates shall be liable to the purchaser of this unit or third parties for damages, losses, costs, or expenses incurred by purchaser or third parties as a result of: Accident, misuse, or abuse of this unit, or unauthorized modifications, repairs, or alterations to this unit, or failure to strictly comply with LAUNCH operating and maintenance instructions. LAUNCH shall not be liable for any damages or problems arising from the use of any options or any consumable products other than those designated as Original LAUNCH Products or LAUNCH Approved Products by LAUNCH.

All information, specifications and illustrations in this manual are based on the latest information available at the time of printing. LAUNCH reserves the right to make changes at any time without prior written or oral notice.

Trademark Information

LAUNCH is a registered trademark of LAUNCH TECH CO., LTD. (LAUNCH) in China and other countries. All other LAUNCH trademarks, service marks, domain names, logos, and company names referred to in this manual are either trademarks, registered trademarks, service marks, domain names, logos, company names of or are otherwise the property of LAUNCH or its affiliates. In countries where any of the LAUNCH trademarks, service marks, domain names, logos and company names are not registered, LAUNCH claims other rights associated with unregistered trademarks, service marks, domain names, logos, and company names. Other products or company names referred to in this manual may be trademarks of their respective owners. You may not use any trademark, service mark, domain name, logo, or company name of LAUNCH or any third party without permission from the owner of the applicable trademark, service mark, domain name, logo, or company name. You may contact LAUNCH by visiting the website at www.cnlaunch.com, or writing to LAUNCH TECH. CO., LTD., Launch Industrial Park, North of Wuhe Avenue, Banxuegang, Bantian, Longgang, Shenzhen, Guangdong, P.R.China, to request written permission to use Materials on this manual for purposes or for all other questions relating to this manual.

Safety Precautions

The X-431 ADAS PRO+ calibration tool is exclusively intended for use on a vehicle. To avoid personal injury, property damage, or accidental damage to the product, read all of the information in this section before using the product:

- To operate the X-431 ADAS PRO+ calibration tool properly, user must have knowledge of automotive technology and is therefore aware of the sources of danger and risks in the repair shop and on vehicles.
- All notes given in the individual sections of the operating instructions apply. In principle it is required to follow the steps and safety precautions stated below.
- Furthermore, pay attention to all general instructions from labor inspectorates, trade associations and vehicle manufacturers as well as all laws, legal ordinances and instructions which have to be commonly obeyed by a repair shop.

The safety messages herein cover situations LAUNCH is aware of. LAUNCH cannot know, evaluate or advise you as to all of the possible hazards. You must be certain that any conditions or service procedure encountered do not jeopardize your personal safety.

Warning Symbols and Definitions	
	Indicates that there is a serious hazard. If it is not evaded or wrongly operated, it will cause death or serious injury to the user.
	Indicates that there is a potentially dangerous situation. If it is not circumvented or wrongly operated, it will cause minor injuries or property damage.
	Indicates the points of attention when using and the use situation to be avoided as much as possible.



The exhaust gas from the engine contains a variety of toxic compounds (such as hydrocarbons, carbon monoxide, nitrogen oxides, etc.), which can cause unresponsiveness, and even serious personal injury or death. The vehicle under test should be parked in a well-ventilated place during operation.



It is forbidden to replace the built-in lithium battery by yourself, and the internal battery must be replaced by an authorized maintenance organization or authorized technician. Modification of the battery pack or improper replacement of the battery pack can cause an explosion.



Please read all safety warnings and operating information carefully. Failure to follow the safety warnings and operating information may result in electric shock, fire or serious personal injury.

1. Always keep the vehicle calibration in a safe environment.
2. Do not connect or disconnect the diagnostic equipment when the ignition switch is on or the engine is running.
3. Do not operate the diagnostic equipment while driving the vehicle to avoid distraction and cause a car accident.
4. Before starting the engine, the hand brake should be pulled, especially the front wheels should be blocked, and the gear lever should be placed in Neutral (manual transmission) or [P] position (automatic transmission) to avoid starting the engine and causing the vehicle to rush out and hurt people .
5. No smoking or sparks near the battery or engine. Do not operate the calibration tool in an explosive environment.
6. Please provide a fire extinguisher next to the workplace.
7. Please wear protective glasses when inspecting the car.
8. Make anti-rolling settings for the vehicle.
9. Be extremely careful when working around the ignition coil, distributor cap, ignition circuit and ignition plug. The voltage generated by these components when the engine is running is very dangerous.
10. To avoid damaging the diagnostic device or generating incorrect data, please ensure that the vehicle battery is sufficiently charged and the connection of vehicle diagnostic link connector is clean and safe.

Precautions for Operating X-431 ADAS PRO+ Calibration Tool

To avoid user injury or calibration tool damage caused by improper operation, please pay attention to the following points:

- Please be sure to install it in accordance with the method described in the manual.
- Prevent X-431 ADAS PRO+ from contacting water and being violently impacted.
- Prevent X-431 ADAS PRO+ from long-time sunlight.
- The light source should ensure that there are no reflection points on the calibration target.
- There should be no direct light source in the camera's field of view, otherwise the camera will reduce the exposure and darken the captured calibration target, which will adversely affect the calibration.
- The light source should ensure that the illumination of the calibration work site is evenly distributed.
- Please maintain X-431 ADAS PRO+ regularly.

Precautions for Operating the Vehicle

When performing calibration operations, please read the following information carefully:

- Ensure that all wheels of the vehicle are parked on level ground.
- Set the gear position to P (parking) state for Automatic Transmission vehicles.
- During the test, make sure the connection between the diagnostic device and the diagnostic link connector is good which is to avoid signal interruption affecting the test.
- The vehicle system is operating normally and there is no fault stored in the ECU DTC memory.
- To avoid losing the connector, please make sure to remove it from the vehicle diagnostic link connector after use.

Precautions for Using Laser Equipment



- Please store in a dry place.
- The laser beam is projected directly into the eyes, which can cause eye damage.
- Do not look directly at the laser beam.
- Please fix the laser level, do not point the laser beam at people or animals.
- Do not operate the laser level around children. Do not allow children to use laser equipment.
- Do not use a magnifying glass or telescope to observe the laser beam.
- Do not tear off or scratch the warning labels on the laser equipment.
- Do not bring the instrument close to the pacemaker.
- The instrument must be far away from magnetic data carriers and machines that are easily disturbed by magnetic fields.
- Do not operate the instrument in an explosive environment, such as an environment with flammable liquid, gas or dust.
- Do not use strong detergents or chemicals to clean the instrument. The instrument can be cleaned with water or a small amount of soap with water.
- Please prevent the instrument from falling down.
- Remove the battery when not using the instrument for a long time.
- When installing the laser, make sure that it is firmly installed.



Laser recognition glasses cannot be used as protective glasses. After wearing laser recognition glasses, it can help you identify lasers, but they cannot protect you from laser radiation.

Contents

1. Product Introduction 1
1.1 About ADAS 1
1.2 About X-431 ADAS PRO+ 1
1.3 Packing List 2
2. Get to Know X-431 ADAS PRO+ Calibration Tool 5
2.1 Main Components 5
2.2 Base Components 6
2.3 Beam Lifter 8
2.4 Cross Member 9
2.5 Target Holder 10
2.6 Tablet Support 11
2.7 Wheel Clamp Kit 12
2.8 Center Laser（LAC09-02） 14
2.9 Ranging Panel（LAC09-01） 15
3. Initial Use 16
3.1 Install The Adas Calibration Tool 16
3.2 Activate ADAS function 18
4. Start Using ADAS Calibration Tool 20
4.1 Prerequisites for Using ADAS Calibration Tool 20
4.2 Calibrating Camera-based ADAS 24
4.3 Calibrating the Radar Sensor 34
5. Service and Maintenance 41
Appendix: Optional Calibration Targets 42

1. Product Introduction

1.1 About ADAS

ADAS stands for "Advanced Driver Assistance System". Its principle is to use vehicle cameras, radars, distance measurement and other sensors to sense the surrounding environment, collect data, and perform identification, detection and tracking for static and dynamic objects at any time during vehicle driving. Combined with the navigation map data, perform system calculation and analysis, so as to allow the driver to perceive the possible danger in advance, which effectively increase the comfort and safety of driving.

The cameras and sensors used in ADAS must be precisely calibrated and adjusted. Incorrect calibration will cause the system to output incorrect results or even completely fail, resulting in serious accidents or even death.

1.2 About X-431 ADAS PRO+

As a comprehensive and flexible calibration tool, the X-431 ADAS PRO+ calibration tool of LAUNCH enables you to effectively and accurately calibrate various types of camera and radar driving assistance systems, such as the front camera for the Lane Departure Warning system, radar sensors for ACC (Adaptive Cruise Control) and more.

The X-431 ADAS PRO+ calibration tool has two main components:

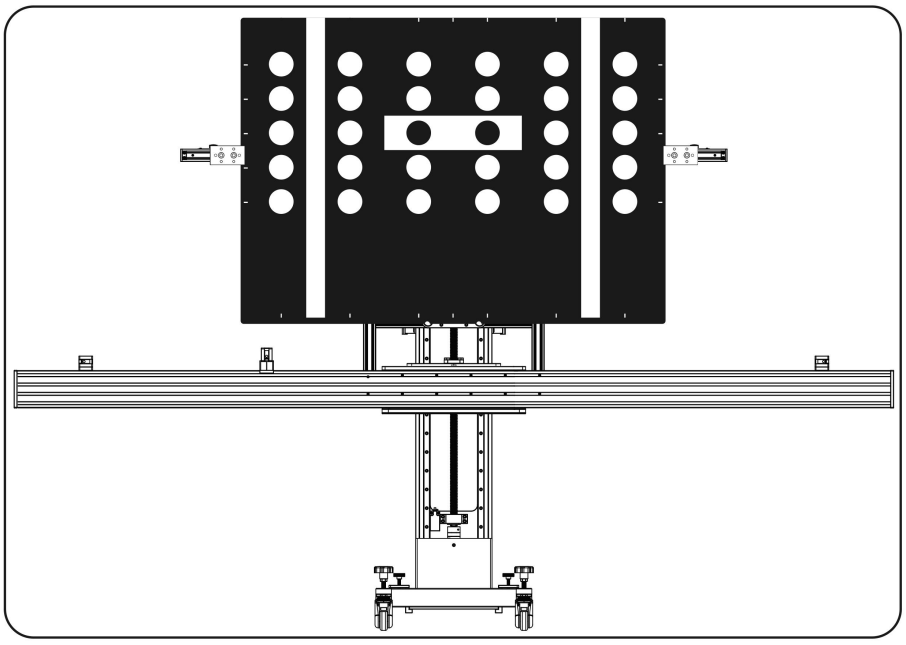

- X-431 ADAS PRO+ Calibration Tool - It is used to determine the locations of vehicle to be calibrated and the calibration tool, combined with the calibration software to complete the

ADAS system calibration. It is mainly composed of calibration main frame (with cross member), wheel clamp, target holder, range finder, ranging panel, calibration target (standard configuration with VW LDW Target; other targets have different configurations with different combinations, Users can also purchase separately) and other components.

• Diagnostic Tool (need to be purchased separately)-The calibration tool needs to be used together with a LAUNCH authorized or approved diagnostic tool that is compatible with ADAS functions.

1.3 Packing List

Please check the packing list after the receiving the calibration tool, so that you can immediately complain about potential damage or missing components. For different destinations, accessories may be different. Please consult your local dealer for more details.

Please note when unloading: heavy equipment may fall and cause personal injury. Please unload the equipment with the help of others or use appropriate auxiliary tools as needed.

Name of accessories	Reference picture	Quantity
Main Frame	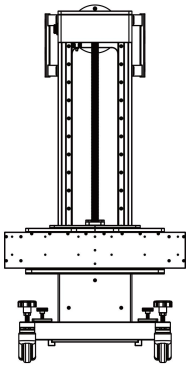	1
Cross Member Kit (including 2 positioning range finders-green)		1

Tablet Support	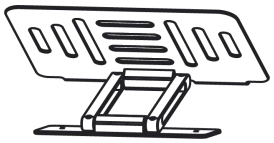	1
Wheel Clamp Kit	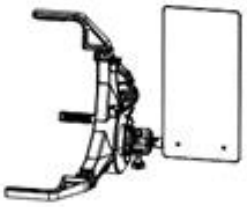	2
Laser Range Finder-Blue (Height)	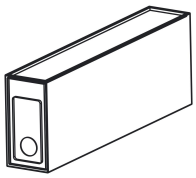	1
Center Laser LAC09-02		1
LDW Target Holder Kit	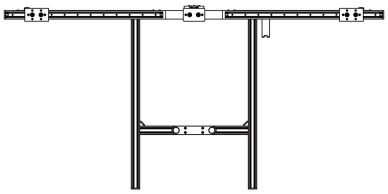	1
VW/Audi LDW Target LAM01-02	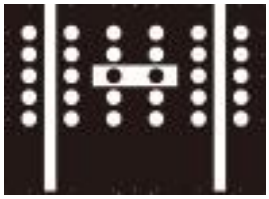	1
Ranging Panel LAC09-01		1

Distance Measurement Unit (including 1 laser range finder-green)	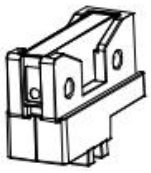	1
Power Adapter	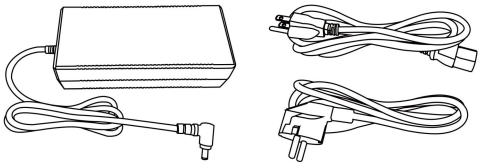	1
ADAS Activation Card	-	1
User Manual	-	1
Packing List	-	1
Calibration Targets	For other specific calibration targets, please refer to [Appendix]	Optional

2. Get to Know X-431 ADAS PRO+ Calibration Tool

2.1 Main Components

The X-431 ADAS PRO+ calibration tool is mainly composed of the following components:

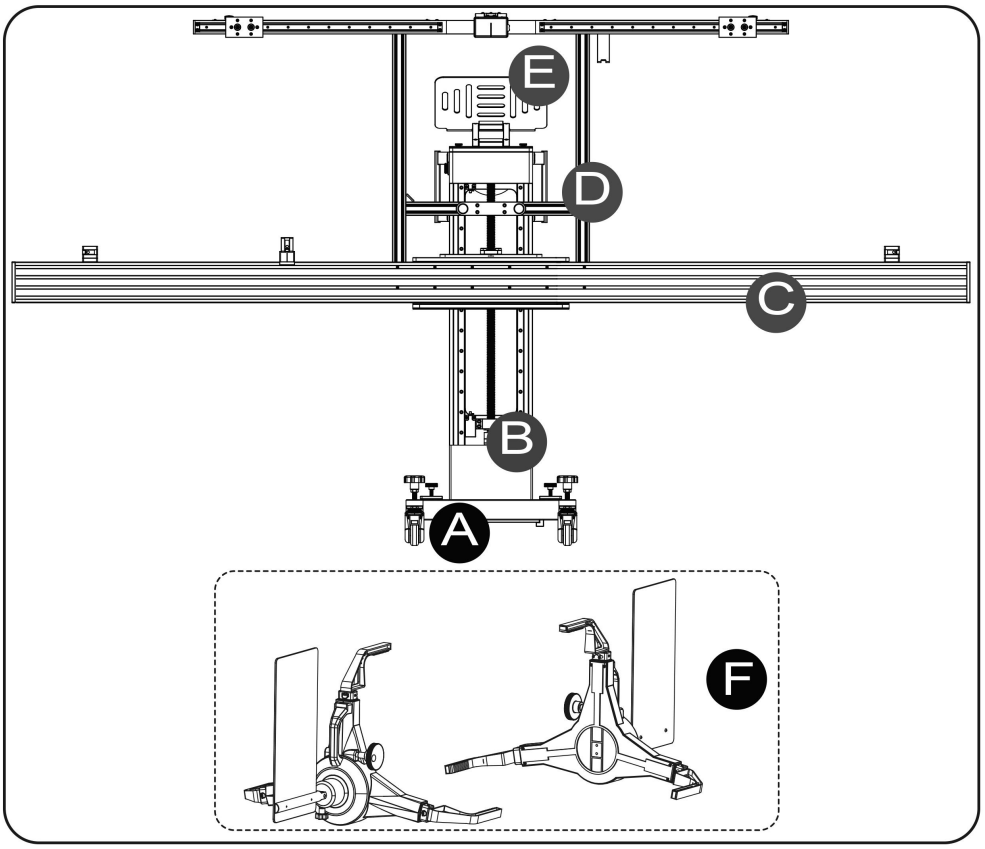

(*This drawing is not a physical picture of the product, which is only for explanation. Due to the continuous improvement of the product, it will be updated from time to time, please refer to the actual product.)

No.	Specific Description
A	**Base Components** It is used to fix the beam lifter, balance the cross member and target holder installed on the beam lifter, and support the front-rear fine-tuning. The base is equipped with 4 rollers, which is convenient for users to move the calibration tool.
B	**Beam Lifter**

	It is fixed in the middle of the base, used to fix the cross member and the target holder and realize lifting and lowering calibration tool height (both of manual and electric adjustments are supported).
C	**Cross Member** It is installed on the beam lifter and used to place the target holder, the central range finder and the ACC radar target (optional).
D	**Target Holder** Used to install and hang LDW target.
E	**Tablet Support** Used to place diagnostic device.
F	**Wheel Clamp Kit** It is installed on the rear wheel of the vehicle and working together with the left and right positioning range finders on the cross member to adjust the calibration tool to make it parallel with vehicle.

2.2 Base Components

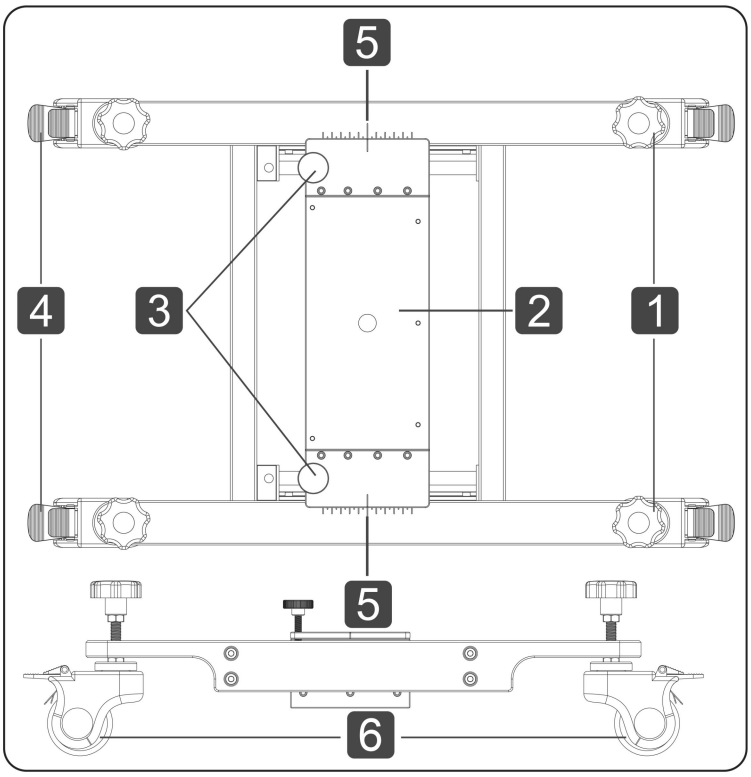

No.	Specific Description
1	**Adjustment Knob** Used to adjust the level of the calibration tool.
2	**Beam Lifter Connecting Plate** It is used to install a fixed beam lifter, making the front and rear fine-tuning available.
3	**Front and Rear Fine-tuning Locking Knob** Front and rear fine-tuning for the position is available after unlocking this knob.
4	**Brake Device** Press it down to lock the universal wheel (5) and fix the calibration tool position.
5	**Center Tick Mark** Used to indicate if the calibration tool is centered for front and rear.
6	**Universal Wheel** Used to move the calibration tool.

2.3 Beam Lifter

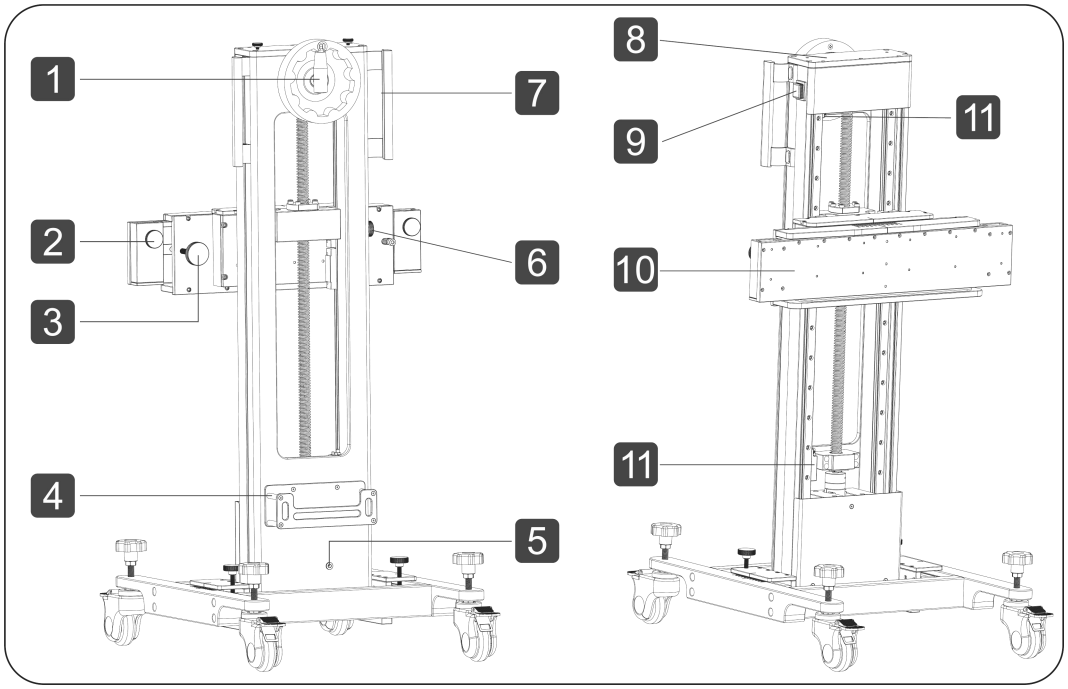

No.	Specific Description
1	**Hand Wheel** Used to manually raise and lower the calibration tool height.
2	**Fixing Knob** Used to fix the target holder.
3	**Angle Fine-tuning Knob** Used to adjust the calibration tool parallel to the vehicle.
4	**Hanging Shelf** Used to place power adapter or portable power bank (optional).
5	**Power Jack** Used to connect the power adapter to supply power to the calibration tool.
6	**Left and Right Fine-tuning Knob** It is used to adjust the calibration tool to make it align with the vehicle
7	**Handle** Easy to move the calibration tool.

8	**Beam Lifter Top Cover** Used to fix the tablet support.
9	**Lift Switch** Used to electronic control the rising and lowering of the calibration tool, including 3 levels: rising, stop and lowering.
10	**Cross Member Fixing Plate** Used to connect and fix the cross member.
11	**Limit Switch** It is used to stop lifting or lowering when the calibration tool is electrically lifted/lowered to the highest/lowest position. After the limit switch is triggered, forcibly performing manual up/down operations are not allowed which is to avoid damage to the limit switch and calibration tool.

2.4 Cross Member

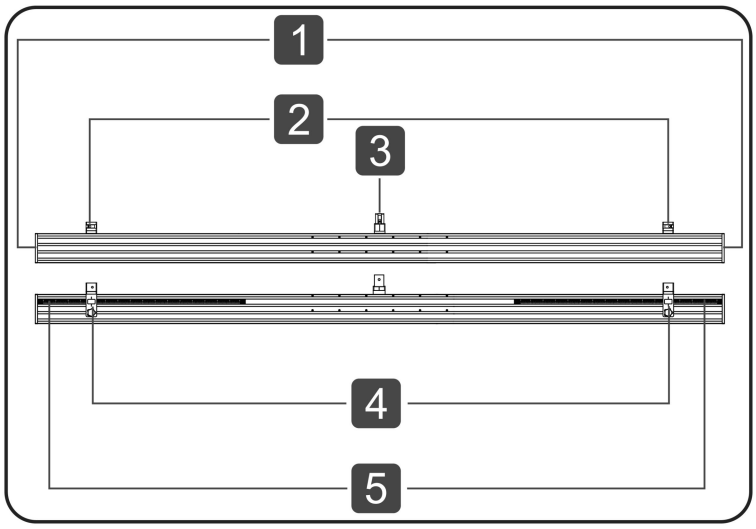

No.	Specific Description
1	**End Cap**
2	**Positioning Range Finder** Used to measure the distance from the calibration tool to the wheel clamp
3	**Center Range Finder Components** It is used to measure the distance between the calibration tool and the

	vehicle and needs to be used with a ranging panel.
4	**Fixing Knob for the Positioning Range Finder** Used to fix the position of range finder.
5	**Scale**

2.5 Target Holder

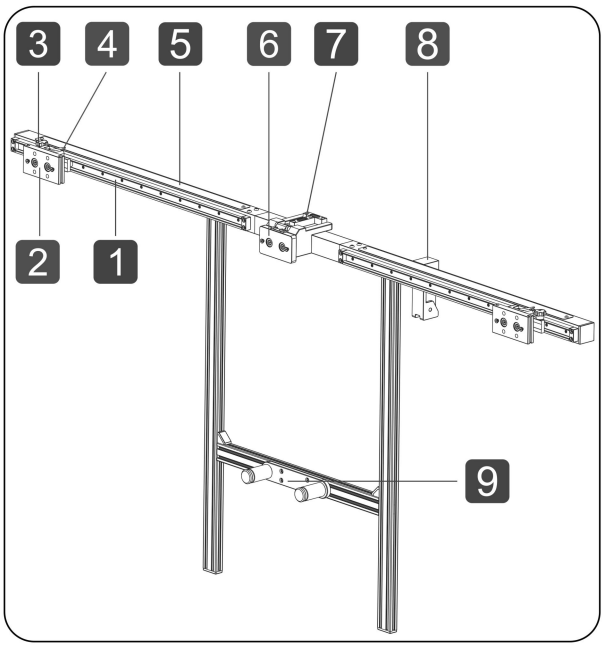

No.	Specific Description
1	**Slide**
2	**Target Fixed Block** Used to install small targets and target extension rods.
3	**Lock Knob** Used to fix the target fixed block. When not locked, the target fixed block can move left and right on the slide rail.
4	**Indication Arrow**
5	**Scale**
6	**Central Target Fixed Block**

	Used to install the center laser and small targets. When installing a large target, it should be pushed up to ensure that the target can be installed correctly.
7	**Spirit Level**
8	**Height Range Finder**
9	**Target Positioning Base** Used to support the large-size LDW Target.

2.6 Tablet Support

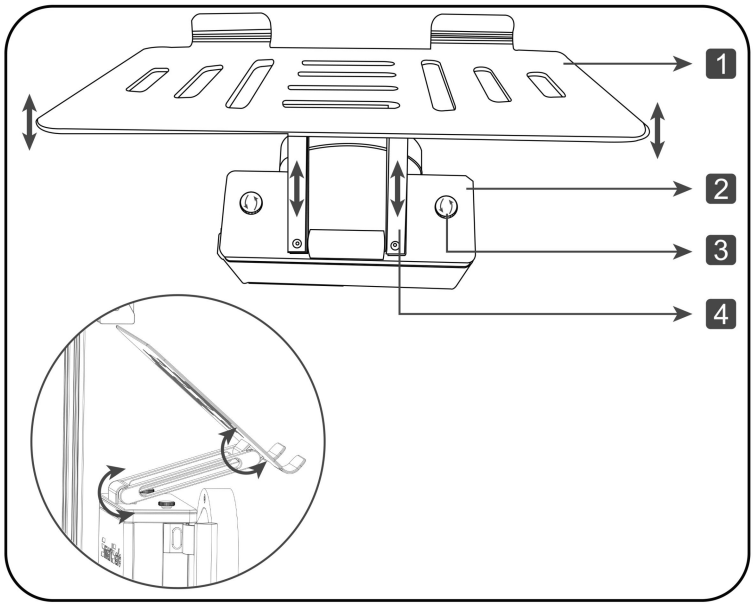

No.	Specific Description
1	**Pallet** Used to place the diagnostic device.
2	**Tablet Support Base** Used to fix the tablet support on the beam lifter.
3	**Fixing Knob** Used to lock the tablet support.
4	**Connecting Rod**

	Used to adjust the height and angle of the tablet support.

* Warning: Please pay attention to adjust the position of tablet support before lifting the target support, so as to avoid causing damage to the calibration tool or objects on the tablet support falling down due to target support blocked.

2.7 Wheel Clamp Kit

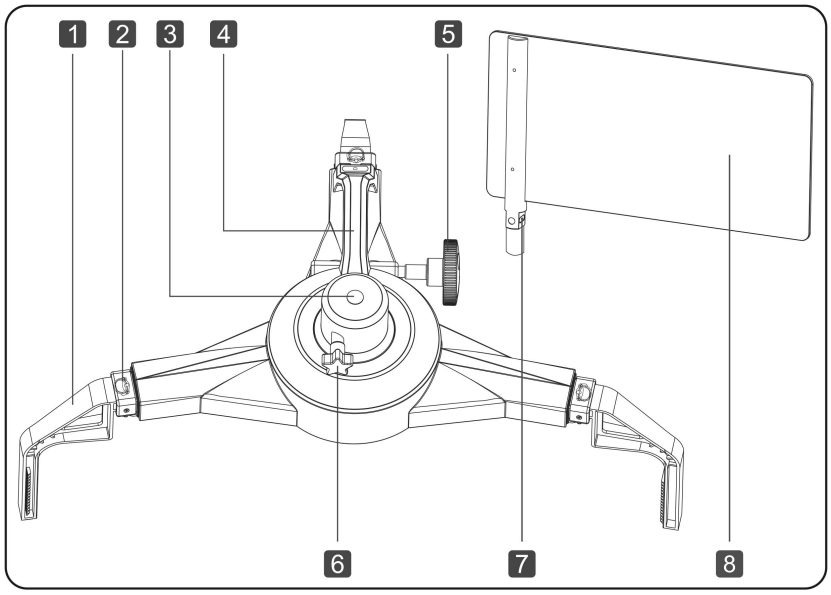

No.	Specific Description
1	**Suspension Bracket** Used to fix the wheel clamp on vehicle tire.
2	**Pull Switch** Used to adjust the mounting position of suspension bracket or take the suspension bracket out of the wheel clamp.
3	**Mounting Hole** Used to install the wheel clamp panel.
4	**Handle** Used to hold the wheel clip.
5	**Adjustment Knob**

	Used to adjust the extension of wheel clamp suspension bracket to suit different sizes of tires.
6	**Fixing Knob** Used to lock the wheel clamp panel in the mounting hole (3).
7	**Wheel Clamp Panel Spirit Level** Used to determine whether the wheel clamp panel is perpendicular to the vehicle tire.
8	**Wheel Clamp Panel** Used to measure the distance from calibration tool to the wheel clamp with the positioning range finder on the cross member.

The wheel clamp provides two suspension brackets (long and short), users can choose to use according to the actual vehicle conditions, and the installation and adjustment methods are the same.

2.7.1 Install the Suspension Bracket

1. Pull up the pull switch (2) and respectively insert the three suspension brackets (1) into the wheel clamp as shown in the figure below, ensuring that the installation depths of each suspension bracket are the same.

2. The two holes on the suspension bracket are used to lock the applicable maximum and minimum distances of the suspension bracket. After the suspension bracket is locked, the pull switch must be pulled up to pull out/insert the suspension bracket again.

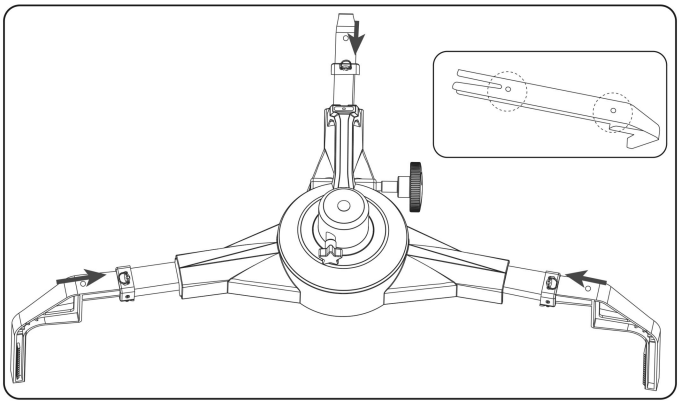

2.7.2 Install the Wheel Clamp Panel

1. Loosen the fixing knob (6).

2. Insert the wheel clamp panel into the mounting hole (3), make sure that the wheel clamp

panel level (7) is facing upwards, and tighten the e fixing knob (6).

3. After installation, hold the handle (4) and place the wheel clamp kit on the ground as shown in Figure ①. When using a short suspension bracket, hang the wheel clamp on the cross member of calibration tool as shown in Figure ②. Do not place the wheel clamp as shown in Figure ③ to avoid damage to the components.

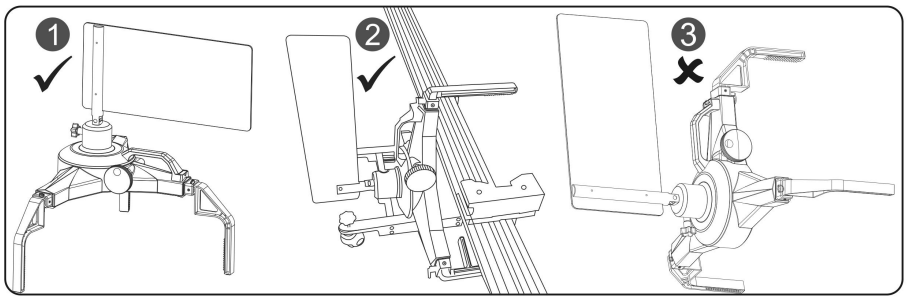

2.8 Center Laser (LAC09-02)

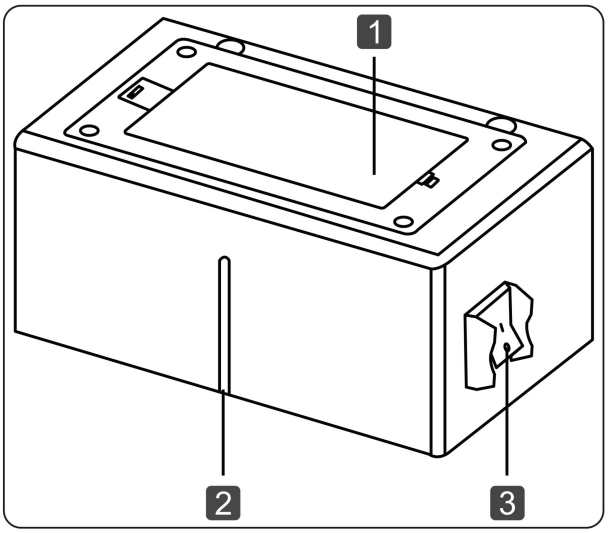

No.	Specific Description
1	**Battery Case** Supply power to the laser, and two AA batteries are required.
2	**Laser Line Output Port**
3	**Switch** Used to turn on or off the laser line of center laser.

2.9 Ranging Panel (LAC09-01)

With a central range finder component, it is used to measure the distance between calibration tool and the vehicle.

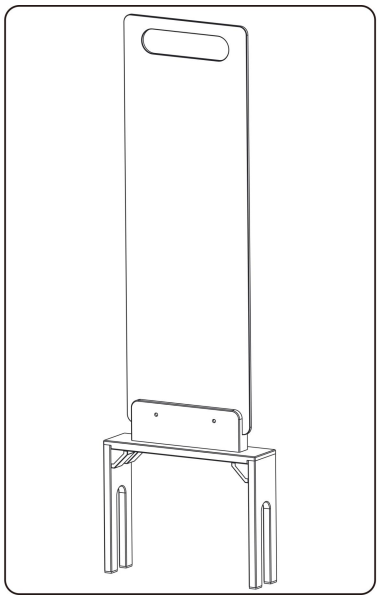

3. Initial Use

3.1 Install The Adas Calibration Tool

3.1.1 Install The Cross Member

1. Place the cross member on the cross member fixing plate.
2. Align the cross member and the mounting hole on the cross member fixing plate, and tighten the 12 fixing screws to fix the cross member.

---

* Warning: The cross member is heavy and may fall during assembly and cause personal injury. It is recommended that two people cooperate in the installation.

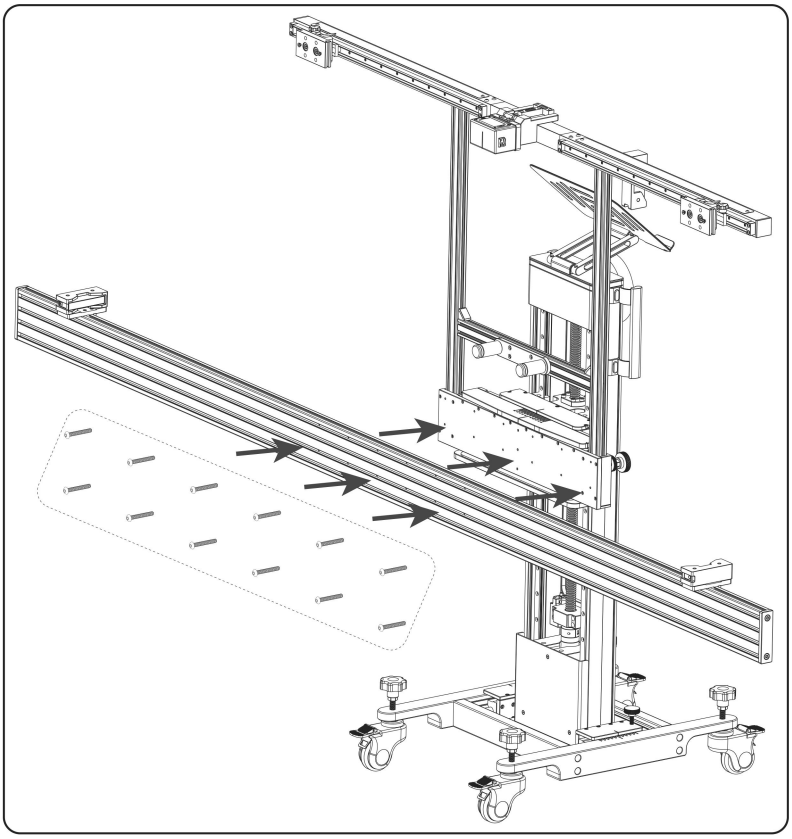

3.1.2 Installation of the Target Holder

1. Insert the target holder into the fixing groove of the target support on the beam lifter, and make sure that the bracket is inserted into the bottom of the fixing groove.
2. Tighten the fixing knobs on both sides to fix the target holder.

---

* Warning: The target holder is heavy and may fall during installation and cause personal injury. Please operate with caution.

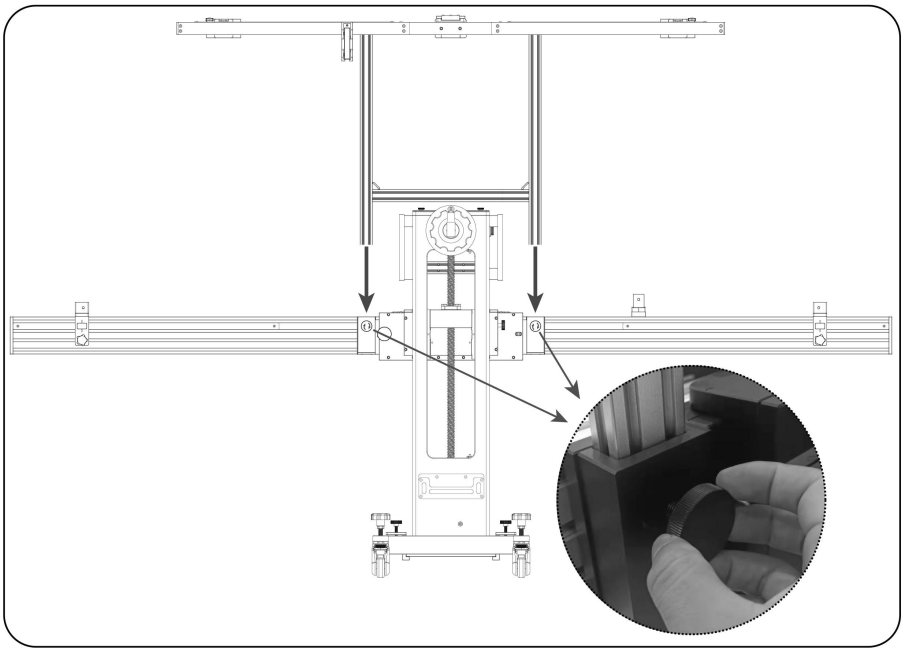

3.1.3 Installation of the Wheel Clamp Kit

Follow the steps below to install the wheel clamp kit on the vehicle tire.

1.Align the wheel clamp panel vertically with the calibration tool, and then hold the handle to hang the wheel clamp on the tire.

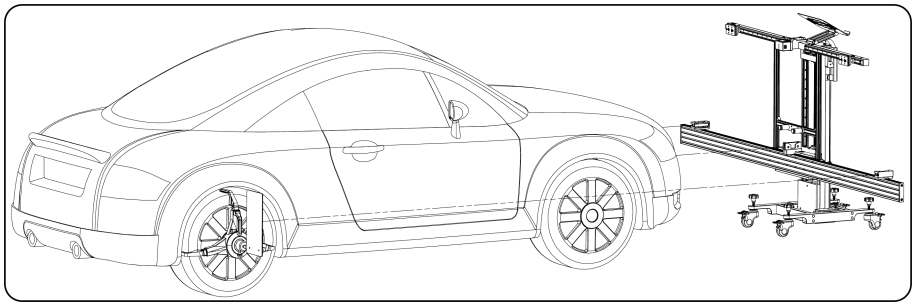

2.Make sure that the spirit level (7) of the wheel clamp panel is centered, and then turn the adjusting knob (5) to make the wheel clamp tighten the tire.

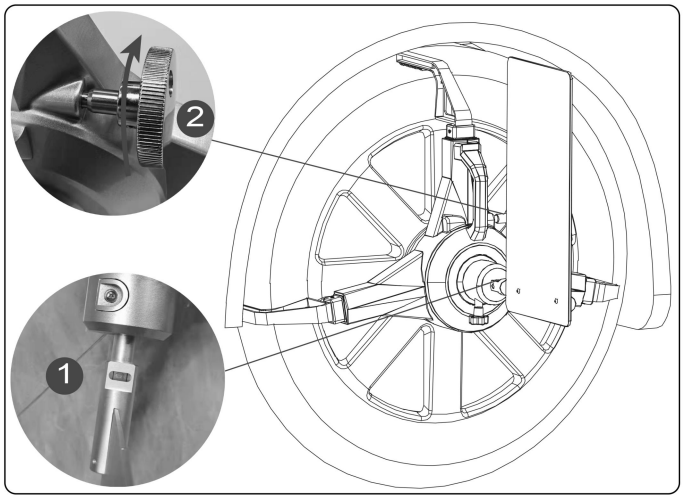

3.2 Activate ADAS function

Before using the calibration function, the user needs to activate the ADAS function authorization on the diagnostic tool (purchased separately) with the activation card included with the machine.

The specific activation steps are as follows:

*Note: For different diagnostic tool, the access to ADAS function may be different.

1. Start the diagnostic device and enter the software main interface.

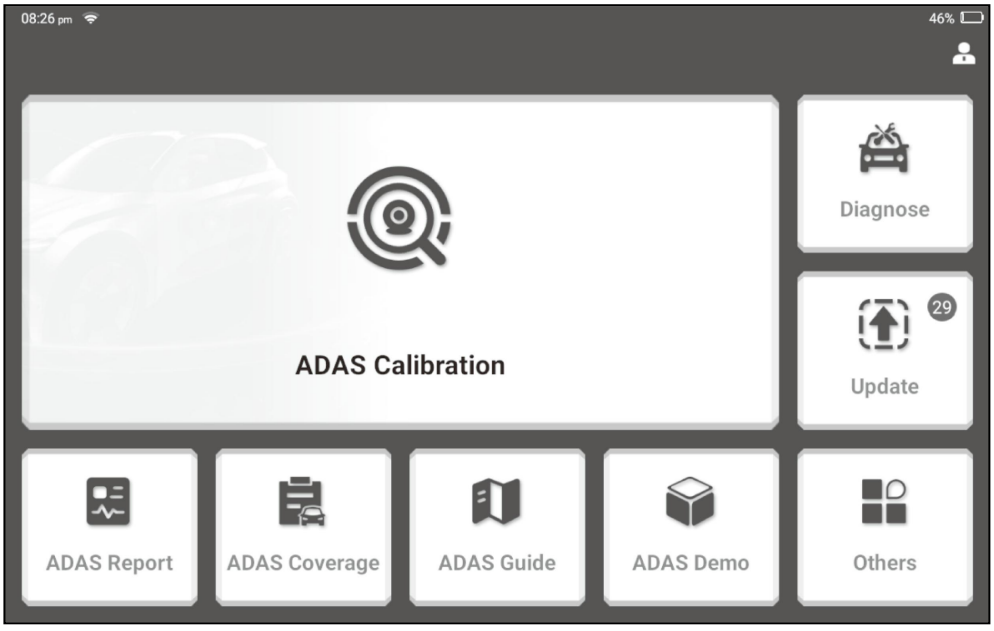

2. Click the "ADAS" icon on the screen, if the ADAS function is not activated, the screen will display as follows:

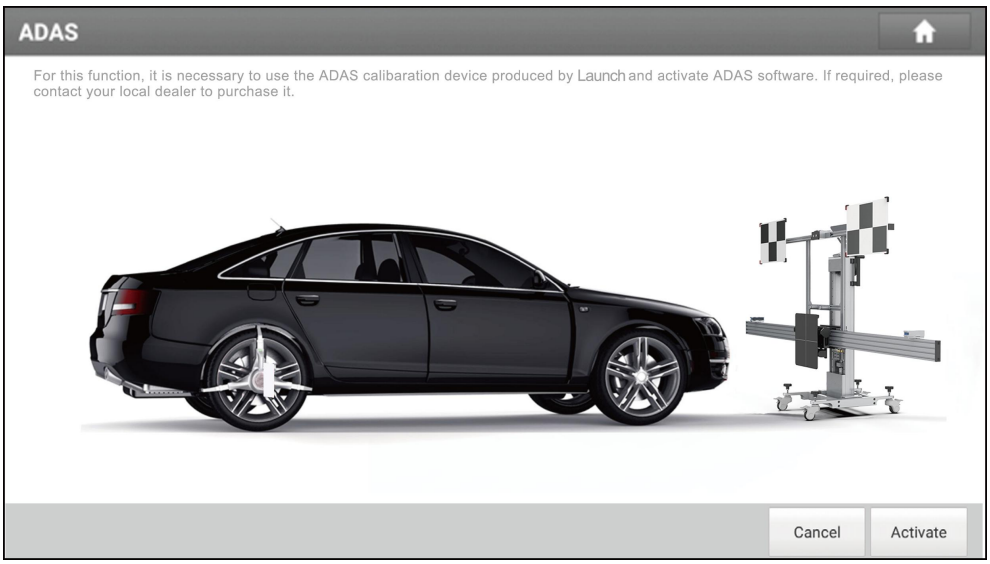

4. Click "Activate" to enter the following interface:

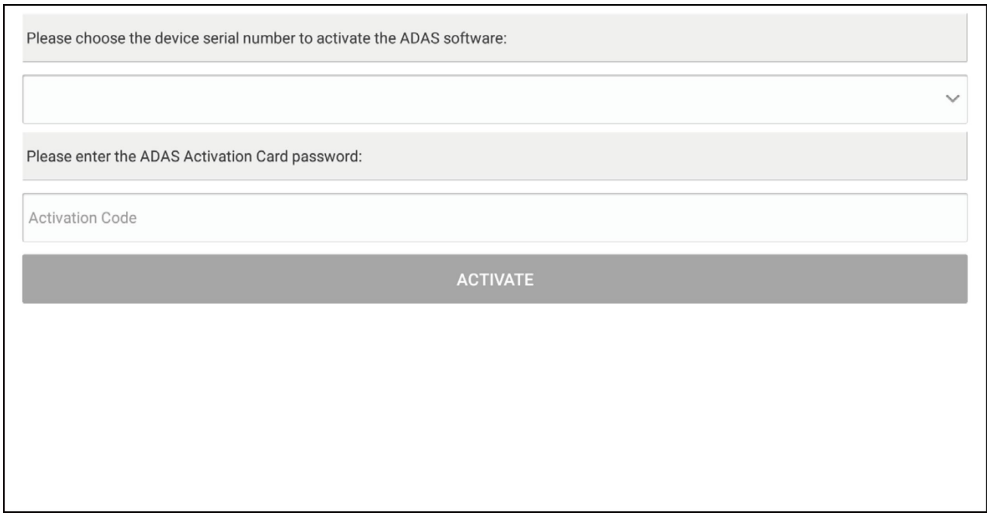

4. Select the correct device serial number, enter the 24-digit activation code (take out the ADAS activation card that comes with the machine, and scratch the coating area to display the activation code), and click "Activate".

5. Complete ADAS activation.

4. Start Using ADAS Calibration Tool

The calibration operations must strictly follow the software prompts on the diagnostic tool. ADAS calibration can be divided into dynamic calibration and static calibration. For static calibration, it requires using the calibration tool and corresponding target to complete. During static calibration, the user is required to place the calibration tool in a fixed position in front of the vehicle according to the software prompts and adjust the device to be parallel and centered to the vehicle, use the correct calibration target, and adjust the target height to the one specified by the software.

4.1 Prerequisites for Using ADAS Calibration Tool

Reason for Calibration:

- Repair or replace the sensor control unit (replace ACC radar, front camera sensor).
- The deviation angle of the sensor is out of normal range (the angle of installation position is incorrect).
- Move the position of the sensor on vehicle body (sensor position changed).
- Repair or replace the parts that fix the front sensor (replace the bumper, front windshield).
- Adjust the chassis.

Before using the calibration tool to perform the calibration, please ensure the following conditions:

- The position of the vehicle with a sensor cannot be damaged.
- The fixed sensor components and brackets cannot be deformed.
- Check the air pressure of tire and correct it to the recommended value if necessary.
- Apply the parking brake and close the door.
- Make sure that the vehicle's coolant and oil should be within the recommended range, and fill up with fuel. The vehicle does not carry any items (passengers or cargo).
- Connect the VCI to the vehicle to ensure that there is no DTC in other systems of the vehicle except ADAS-related systems.
- During calibration, the operator should not support on the vehicle.

4.1.1 Workstation size

4.1.1.1 For Front Camera

The workplace requirements when calibrating the front camera are as follows:

Distance A = about 2.8m (the width of the cross member)

Distance B = about 1m (from the cross member to the wall)

Distance C = at least 0.5m (from the edge of the cross member to other obstacles)

Distance D = varies from vehicle to vehicle, about 1.5m is strongly recommended (from the calibration panel to the vehicle)

Distance E = reserved for about 1m (from the vehicle to other obstacles)

Distance F = at least 0.5m (a lane for technician to walk through)

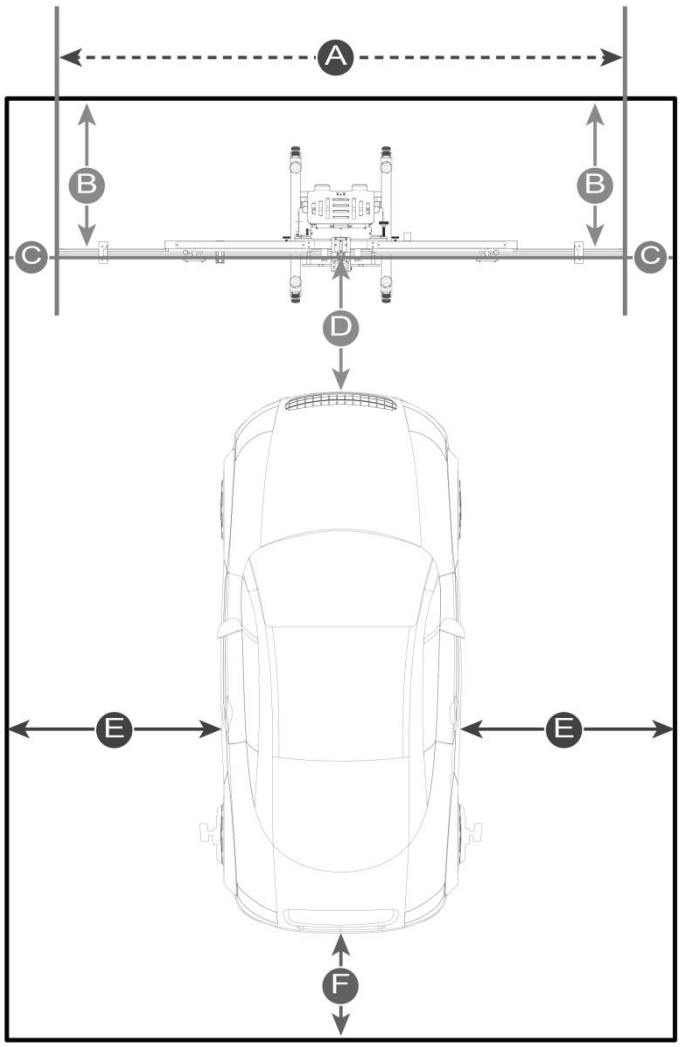

4.1.1.2 For Rear & AVM Cameras

For calibrating the rear & AVM camera, the whole workstation size depends on the vehicle size and the calibration reference pattern. The following illustration describes the maximum workstation size for reference only.

For American vehicles:

Distance A = about 7.3m (the width of the whole workstation)

Distance B = about 12m (the length of the whole workstation)

Distance C = at least 0.5m (a lane for technician to walk through)

Distance D = about 1.7m (the width of the calibration reference pattern. It varies from vehicle to vehicle)

Distance E = about 2.9m (the width of the vehicle, varies from vehicle to vehicle)

For European vehicles:

Distance A = about 4.5m (the width of the whole workstation)

Distance B = about 7m (the length of the whole workstation)

Distance C = at least 0.5m (a lane for technician to walk through)

Distance D = about 0.8m (the width of the calibration reference pattern. It varies from vehicle to vehicle)

Distance E = about 1.9m (the width of the vehicle. It varies from vehicle to vehicle)

For Asian vehicles:

Distance A = about 6.1m (the width of the whole workstation)

Distance B = about 9.5m (the length of the whole workstation)

Distance C = at least 0.5m (a lane for technician to walk through)

Distance D = about 1.6m (the width of the calibration reference pattern. It varies from vehicle to vehicle)

Distance E = about 1.9m (the width of the vehicle. It varies from vehicle to vehicle)

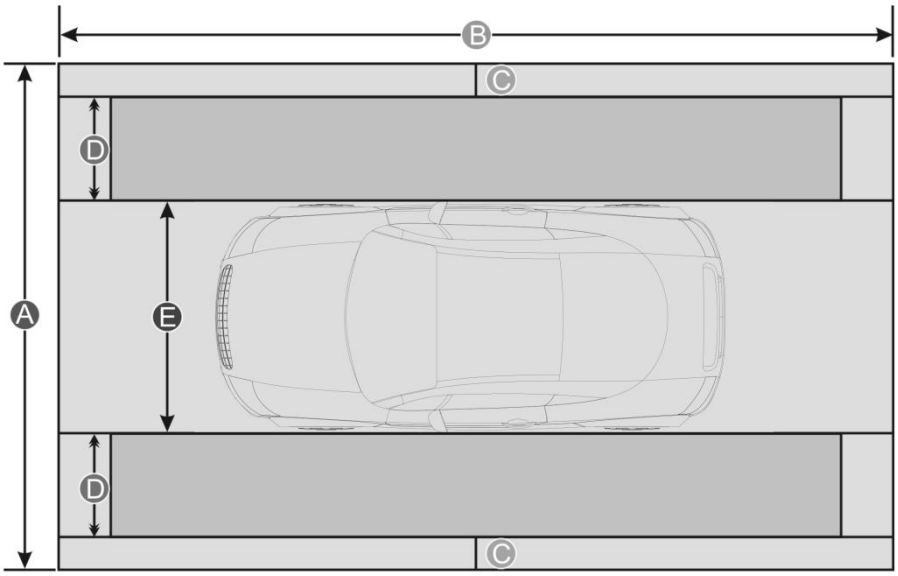

4.1.2 Workstation Ground

Make sure the vehicle is parked with all wheels on an even floor surface.

Correct:

✓	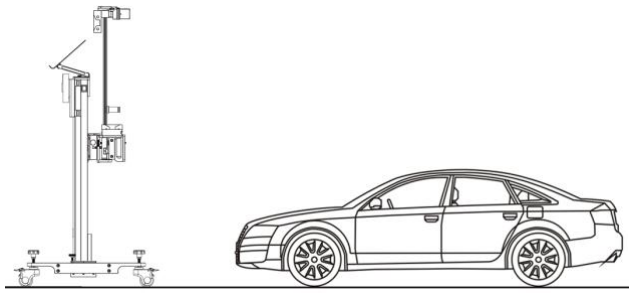

Wrong:

✗	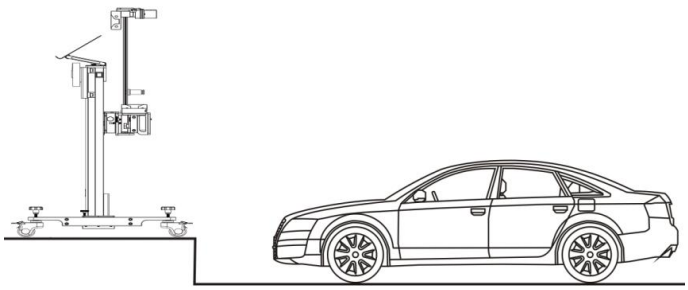

✘	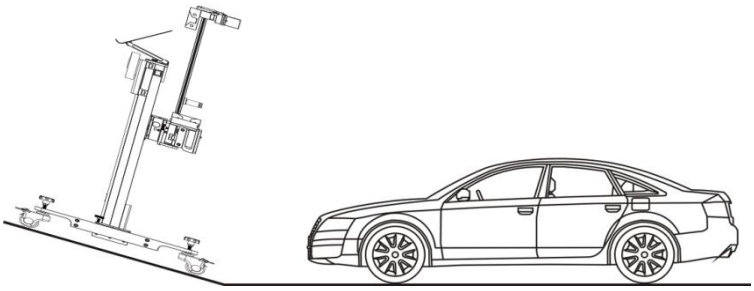
✘	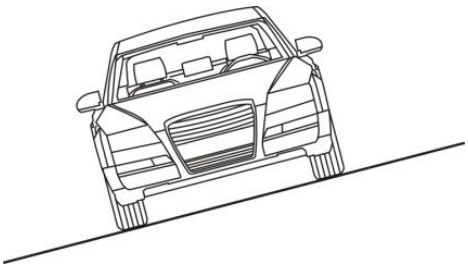

4.1.3 Workstation lighting

✓ The lighting system around the calibration work site should be a non-frequency flash source, including but not limited to: LED light source, industrial lighting that meets international standards, and reverse phase dual light sources.

✓ There should be no direct light source in the view range of camera, otherwise the camera will reduce the exposure and darken the captured calibration target, which will adversely affect the calibration.

✓ The light source is required to ensure that there are no reflection points on the calibration target.

✓ The light source is required to ensure that the illumination of the calibration work site is evenly distributed.

✓ Do not change the light brightness and ensure that there are no other changing light sources around the work site, such as a driving vehicle with lights on.

4.2 Calibrating Camera-based ADAS

Before calibration, you need to connect the diagnostic device and the vehicle, start the APP, and then click "ADAS" to automatically scan to obtain vehicle information and enter the ADAS menu, or manually select the vehicle software and the system that needs to be calibrated.

4.2.1 Calibrating the Front Camera

When using X-431 ADAS PRO+ to perform the calibration of vehicle front camera, it is generally required to operate by following the steps below:

1.Reset the device according to the indication on the calibration tool.

2.Install the wheel clamp and ranging panel.

3.Determine the placement distance of the calibration tool.

4.Adjust the device to make it parallel to the vehicle and centered.

5.Select and install the target of corresponding vehicle model.

6.Adjust the height of calibration target.

7.Perform the calibration function.

Note: The placement position of X-431 ADAS PRO+ calibration tool varies with vehicle models. Please strictly refer to the software prompts.

Take measuring the position of the wheel hub to the target as an example, and introduce the operation steps in detail:

[Step 1] Perform a reset of the device

Check the following positions of the calibration tool and perform a reset:

① Parallel fine-tuning position

② Left and right fine-tuning position

③ Front and rear fine-tuning position

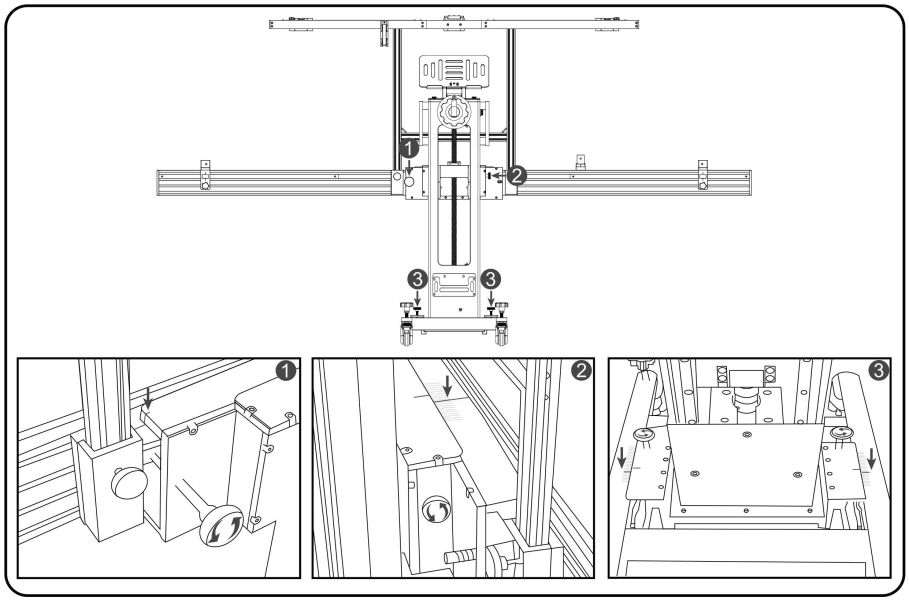

[Step 2] Install the wheel clamp and ranging panel

1. Install the wheel clamp ① on the vehicle left and right rear wheels, while ensuring that the spirit level ② is centered.

2. Place the ranging panel LAC09-01 in the center of vehicle front wheel and make sure it is perpendicular to the front wheel.

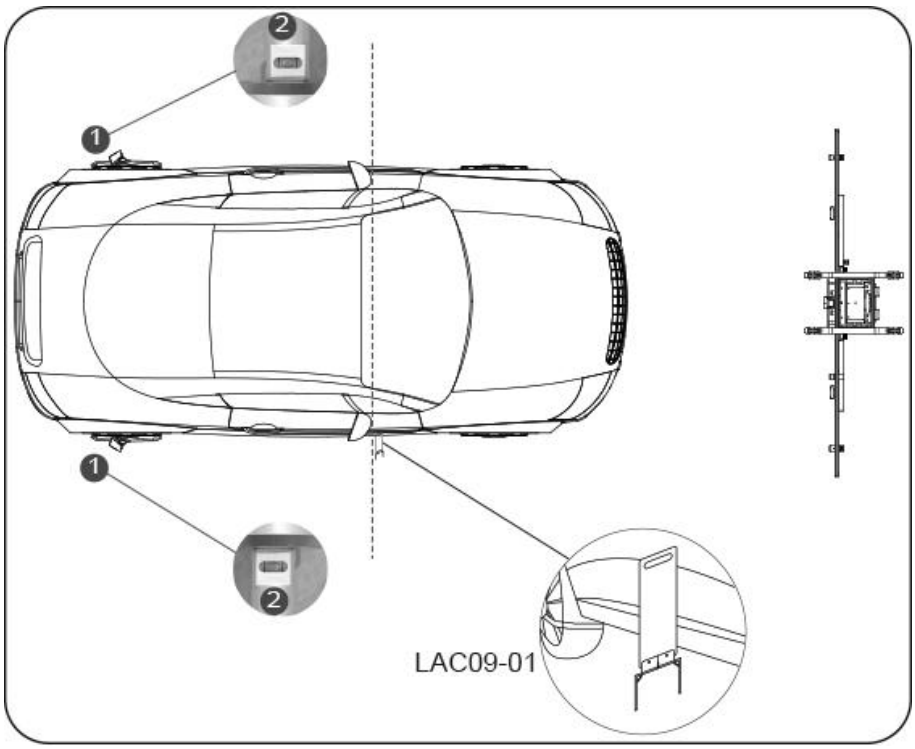

[Step 3] Determine the distance of the calibration tool placement

1. Install and turn on the center laser LAC09-02, then place the calibration tool in front of the vehicle so that the laser line illuminates on the center of the vehicle.

2. Install the range finder ① on the cross member, the range finder ① is on the same side of the range finder panel LAC09-01, turn on the range finder so that the laser spot illuminates on the range finder panel LAC09-01.

3. Find the correct placement of the calibration tool by going forward or backwards so that the value of the range finder ① is L (L=the distance prompted by software).

Note: If the laser spot cannot be illuminated on the ranging panel, adjust the height of the calibration tool.

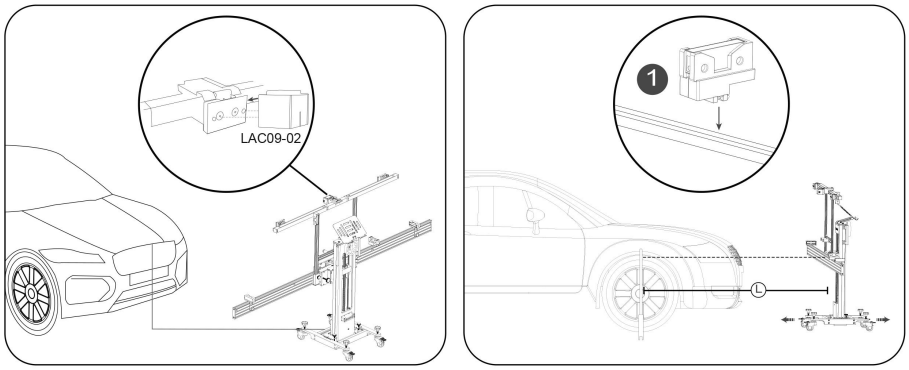

4. Monitor the spirit level ②, rotate the base adjustment knob ③, lock the moving wheels after the calibration tool has been leveled.

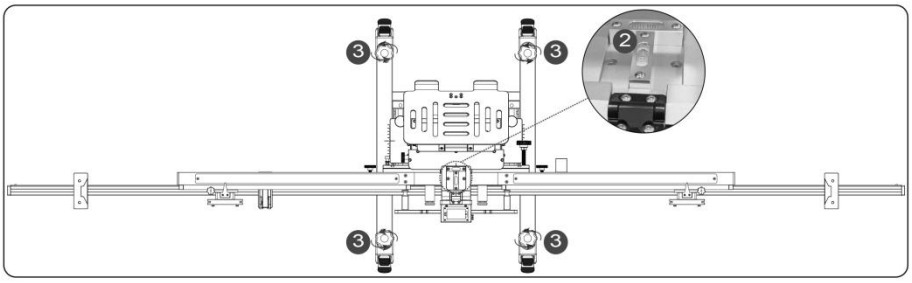

[Step 4] Adjustment of the calibration tool to ensure parallel and center positioning to the vehicle

1. Activate and move the range finder ② on both sides of the cross member so the laser spot will illuminate on the wheel clamp panel.

2. Perform fine tuning on the parallel tuning knob ③ to be consistent with the values of the range finder② on both sides (allow for a ±1mm tolerance).

3. Check whether the value of the range finder ① is still L (L= the distance prompted by software), if not, it can be adjusted by unlocking the front and rear fine-tuning knob ④.

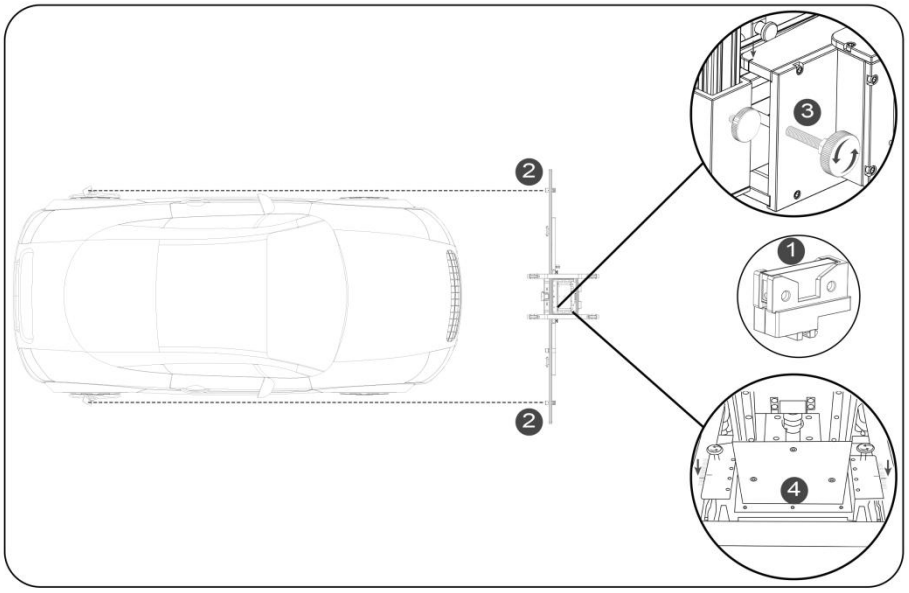

4. Perform fine tuning adjustment via the fine tuning knob for left and right fine tuning ⑤, while ensuring the center laser LAC09-02 illuminate the center of the vehicle.
5. Turn off and remove the center laser LAC09-02.

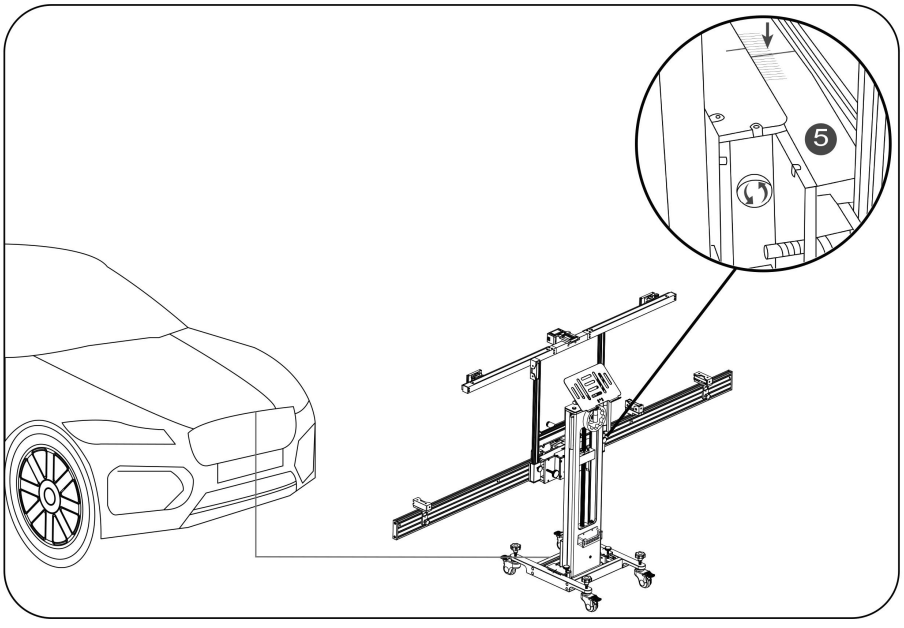

[Step 5] Installing the target

1. Select the corresponding target panel according to the vehicle model to be calibrated.
2. Take the target with large-size front camera (such as LAM01-02) as an example. The installation method is as follows:

1). Turn up the center magnetic plate ① of the target holder to stand up, and move the left

and right target fixing blocks ② to both sides.

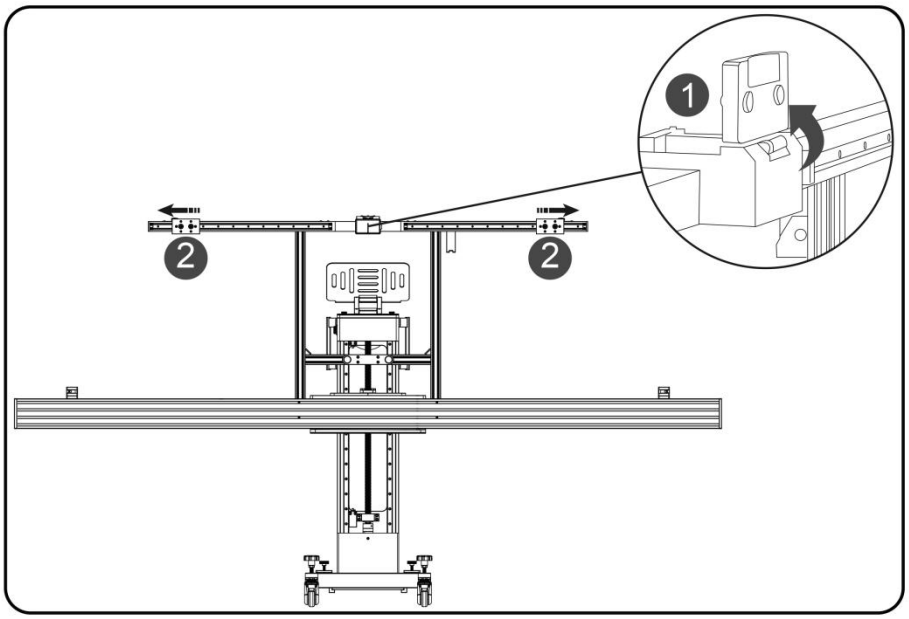

2). Find the mounting hole③ of the large target, which is generally located in the middle of target bottom.

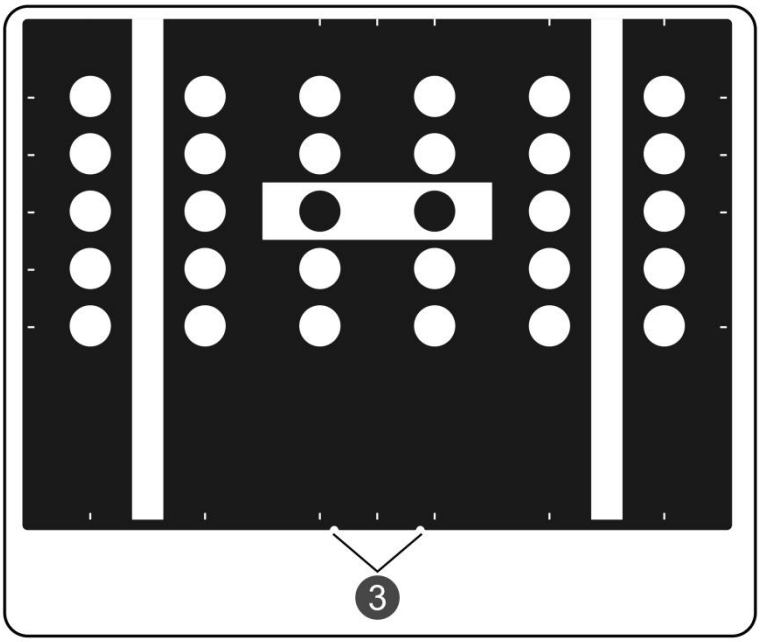

3). Align the target mounting hole with the target positioning base ④ to fix the target, and move the target fixing block ② until both sides of the target are firmly clamped.

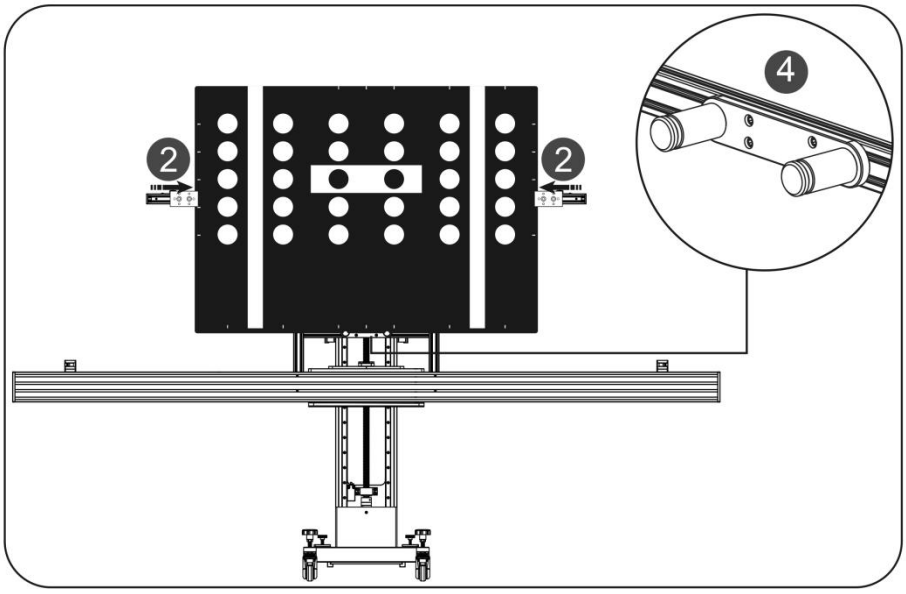

Note: Please refer to the end of this section [Small Target Installation Method] for the installation steps of the target with small-size front camera.

[Step 6] Adjust the height of target according to the software prompt

1. Turn on the height range finder ①, adjust the height of the calibration tool so that the value of height range finder ① is H (H = the height prompted by software).

Note: Please make sure that the laser illumination area is free of water stains and other reflective objects that affect the measurement results.

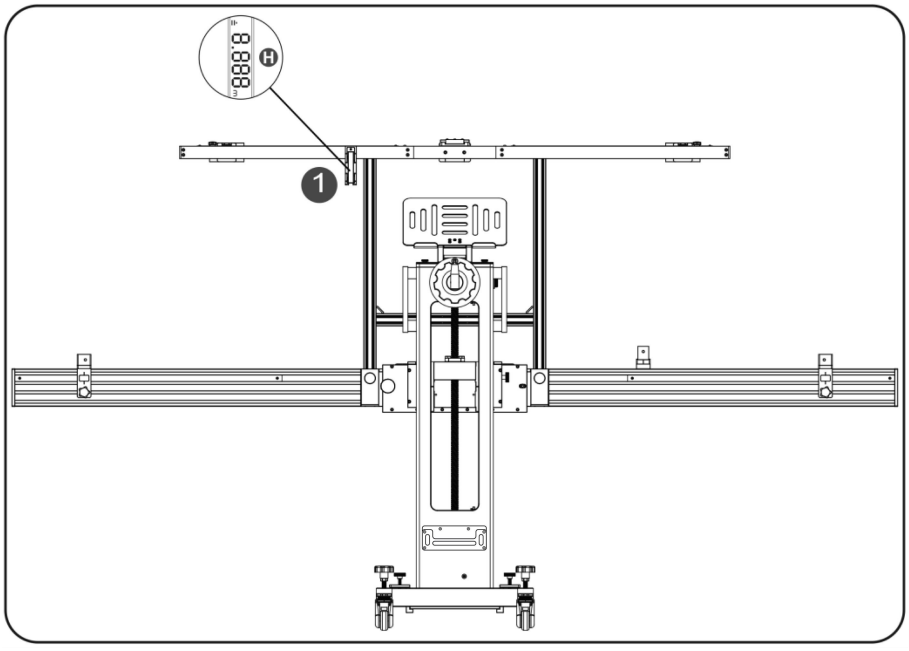

[Step 7] Perform calibration

Perform calibration function as per the software prompts. Save the ADAS report after the calibration completed. It is recommended to scan the system again after the calibration completed to confirm that the failure has been fixed.

[The method of installing small target]

If you are using a small target, please install it according to the following method: align the hole of the fixing base on the back of target with the nail on the target fixing block, hang it on the nail, and pull the target downward to make it installed in place and will not shake.

There are 3 conditions for the installation and use of small targets shown as below:

1. A single target, installed on the fixing block of center target (such as: LAM01-01)

1) Install the target on the fixing frame of center target, and the target fixing frame shall not be turned up.

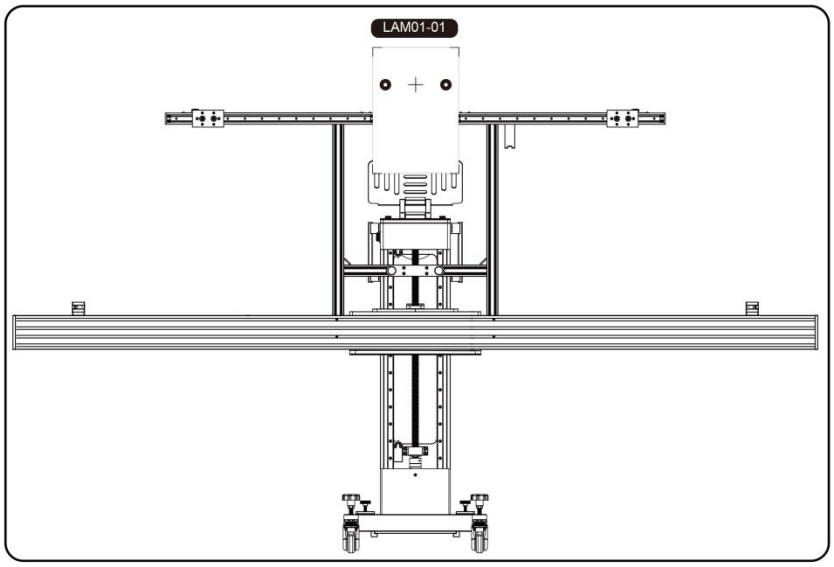

2. A single target, installed on multiple locations (such as: LAM01-06-2)

1）Move the left and right fixing blocks ① of the target to the position W on the scale, W=the scale prompted by software.

2）Install the target on the fixing block of center target and perform calibration.

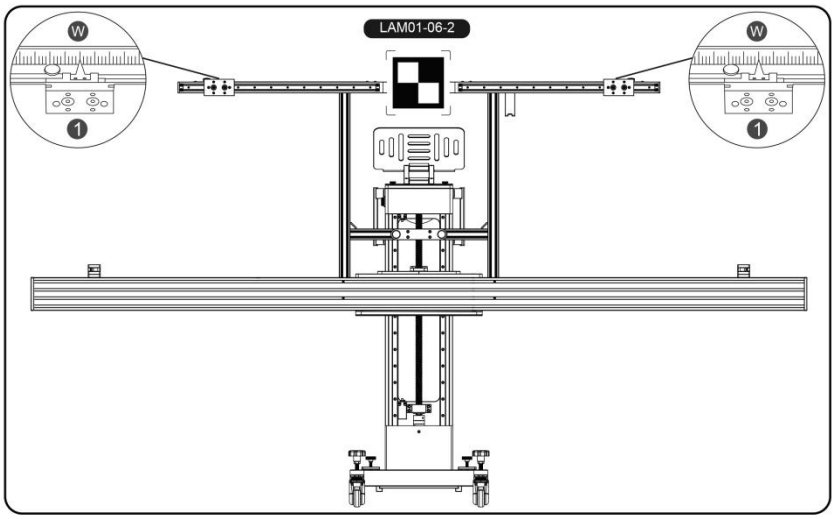

3）After the calibration is passed, remove the target and install it on the fixing block of the left target and perform calibration.

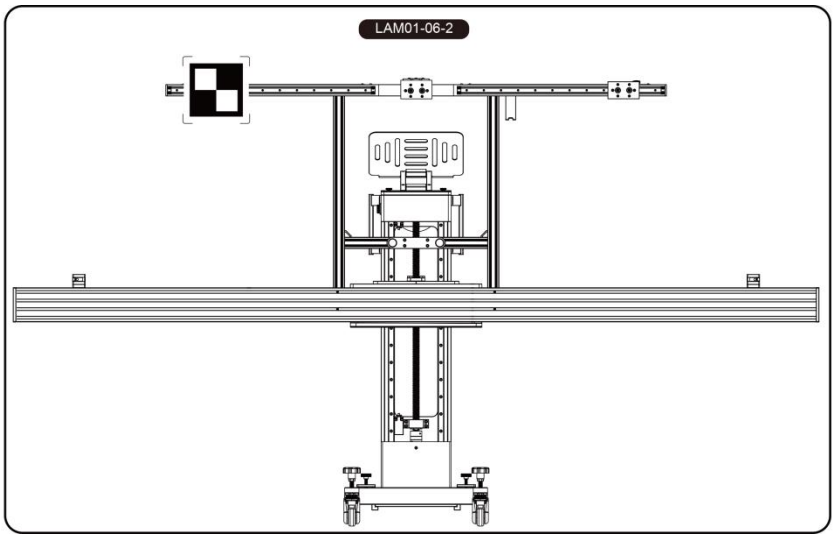

4）After the calibration is passed, remove the target and install it on the fixing block of the right target and perform calibration.

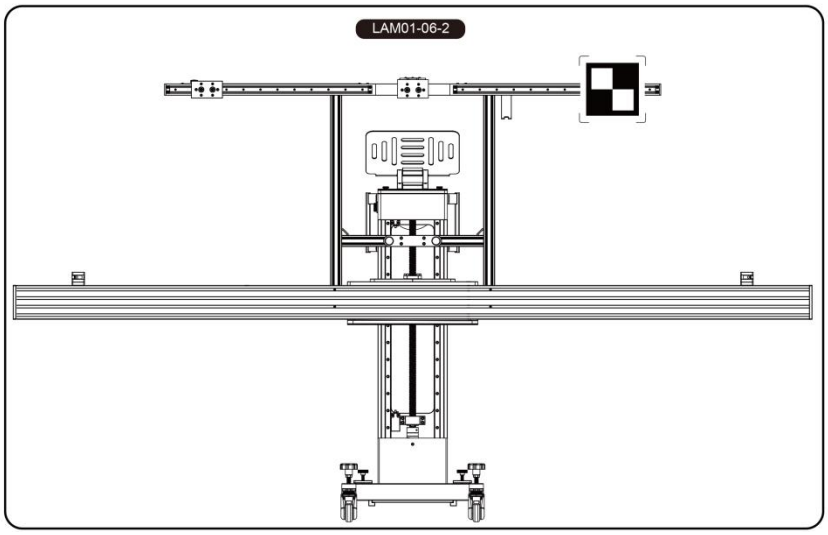

3. Two targets, installed on the fixing block of left and right targets (e.g.: LAM01-04-L / LAM01-04-R)

1）Move the fixing block① of left and right targets to the position W on the scale, W=the scale prompted by software.

2）Install the left and right targets on the target fixing blocks on the left and right sides respectively.

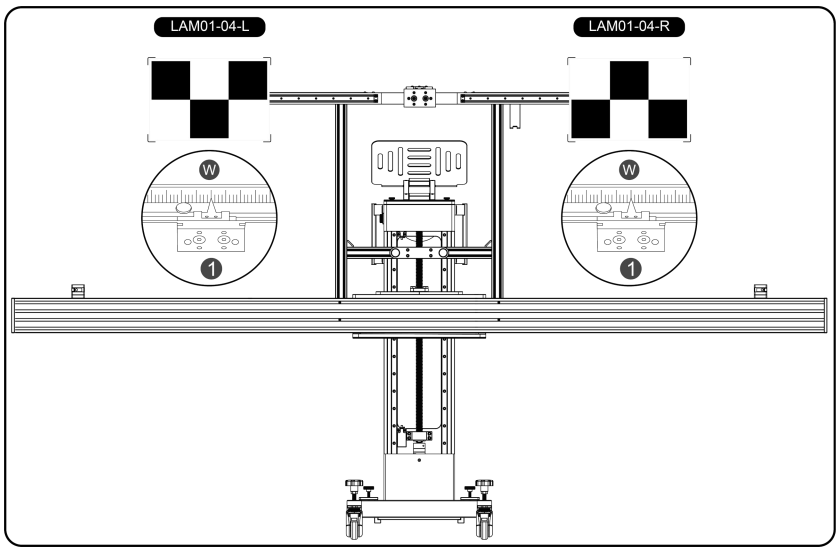

Note: When the lateral width or minimum height of the calibration main frame cannot meet the vehicle calibration requirements, a target extension rod is needed to extend the support.

1) Use the target extension rod LAM09-08 when the minimum height cannot be met. Install it on the target fixing block (the same method as the small target), and then install the target on the extension rod.

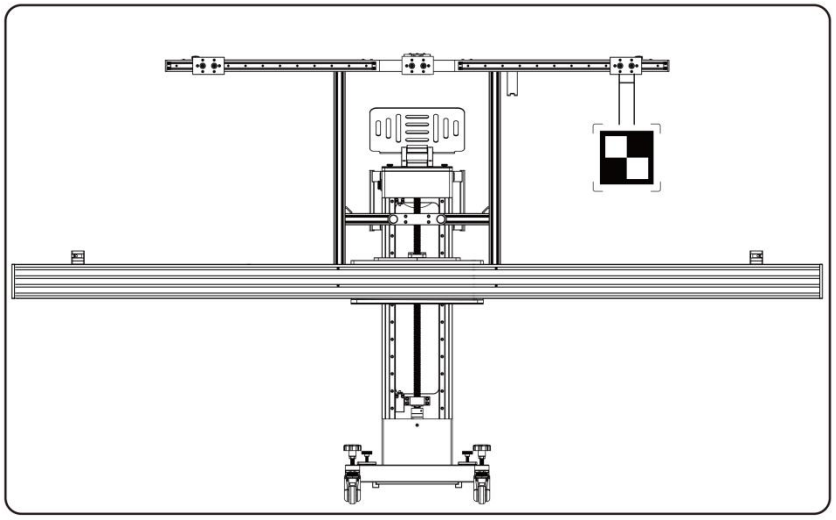

2) When the lateral width is not met, use the target extension rod LAM09-09. Install it on the target fixing block, then use the locking device to ensure that the target extension rod is installed firmly, and then install the target on the extension rod.

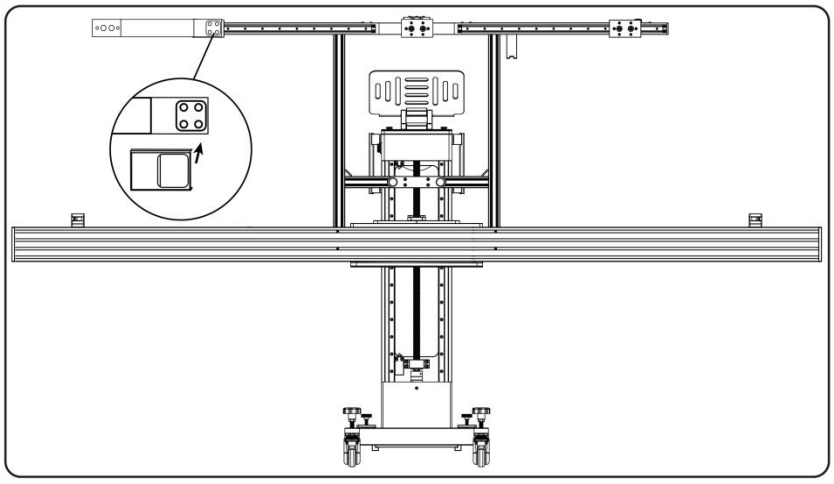

4.2.2 Calibrating the Rear Camera & AVM Camera

When calibrating the rear camera or AVM camera, there is no need to use the X-431 ADAS PRO+ calibration tool, just select the corresponding rear view or surround view calibration target of vehicle model, and place the target on the corresponding position according to the software prompts.

4.3 Calibrating the Radar Sensor

The X-431 ADAS PRO+ calibration tool provides a variety of radar sensor calibration targets (optional), which are used for the calibration of ADAS radar sensor. When using X-431 ADAS PRO+ to perform calibration for vehicle radar sensors, generally you need to follow the steps below (take ACC radar as an example):

1. Reset the calibration tool.

2. Install the wheel clamp and ranging panel.
3. Determine the placement distance of the calibration tool.
4. Adjust the calibration tool to make it parallel to vehicle and being centered.
5. Install the ACC radar reflector and adjust the level position.
6. Adjust the height.
7. Adjust the angle.
8. Adjust the direction of ACC radar sensor.
9. Calibration completed.

The detailed operation steps are shown as below:

[Step 1] Perform a reset of the calibration tool

Check the following positions of the calibration tool and perform a reset:

① Parallel fine-tuning position

② Left and right fine-tuning position

③ Front and rear fine-tuning position

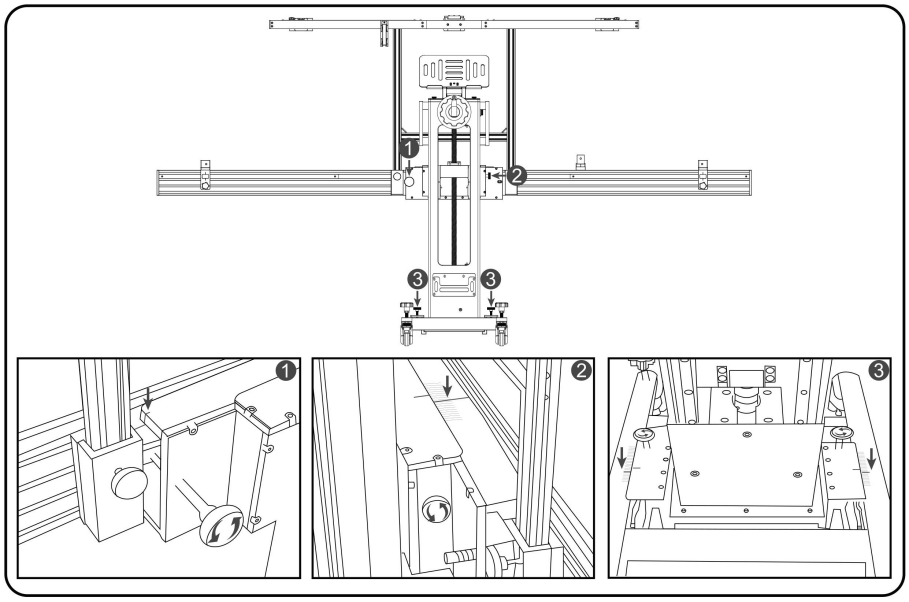

[Step 2] Install the wheel clamp and ranging panel

1. Install the wheel clamp ① on the vehicle left and right rear wheels, while ensuring that the spirit level ② is centered.

2. Place the ranging panel LAC09-01 in front of vehicle and make sure it is close to the bumper and parallel to vehicle.

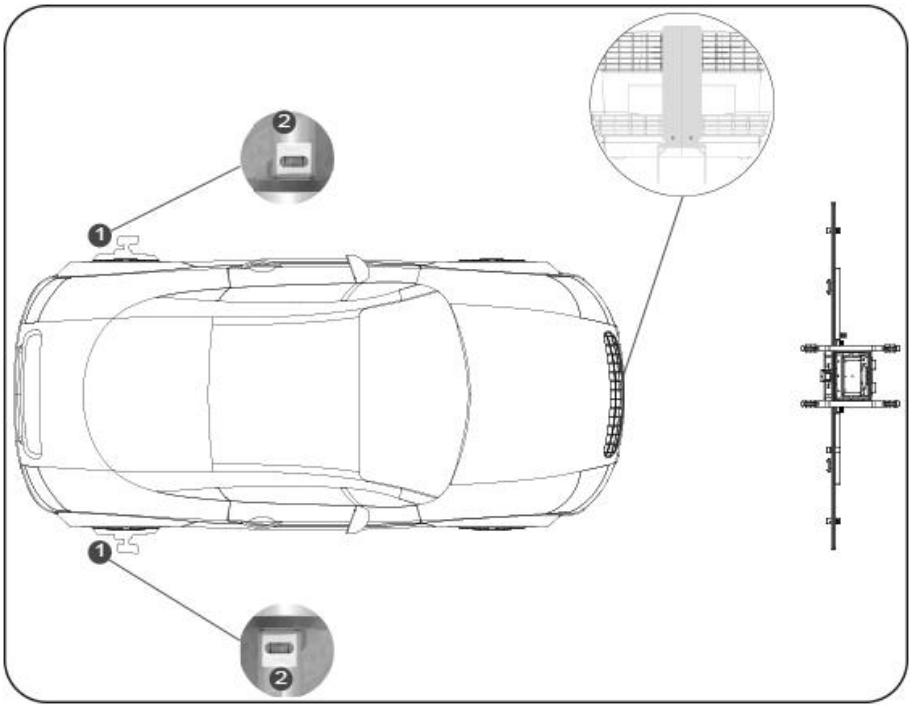

[Step 3] Determine the distance of the calibration tool placement

1.Place the mounting plate LAC09-03 on the cross member so that the centering mark is aligned with the center of the cross member.

2.Assemble the center laser LAC09-02 on the mounting plate LAC09-03, turn on the laser, and place the calibration tool in front of vehicle so that the laser line illuminates on the center of vehicle.

3.Install the range finder ① on the middle area of the cross member, turn on the range finder so that the laser spot illuminates on the range finder panel LAC09-01.

4.Find the correct placement of the calibration tool by going forward or backwards so that the value of the range finder ① is L (L=the distance prompted by software).

Note: If the laser spot cannot be illuminated on the ranging panel, adjust the height of the calibration tool.

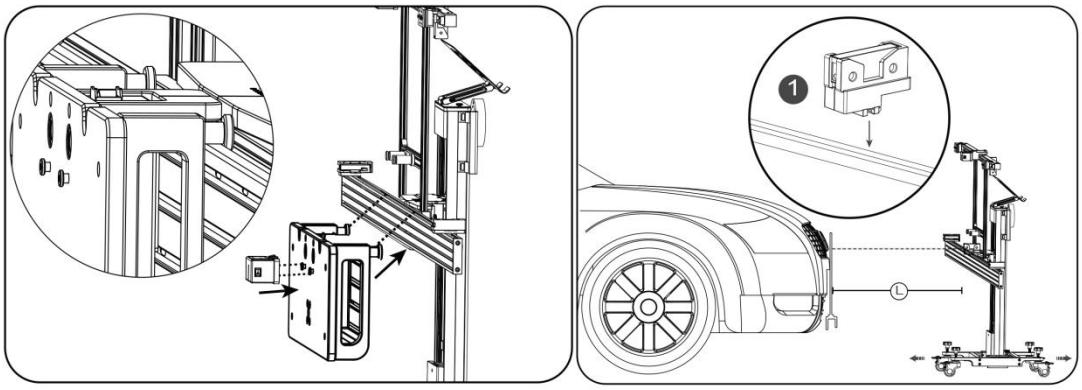

[Step 4] Adjustment of the calibration tool to ensure parallel and center positioning to the vehicle

1. Activate and move the range finder ② on both sides of the cross member so the laser spot will illuminate on the wheel clamp panel.

2. Perform fine tuning on the parallel tuning knob ③ to be consistent with the values of the range finder② on both sides (allow for a ±1mm tolerance)

3. Check if the value of the range finder ① is still L (L= the distance prompted by software), if not, it can be adjusted by unlocking the front and rear fine-tuning knob ④.

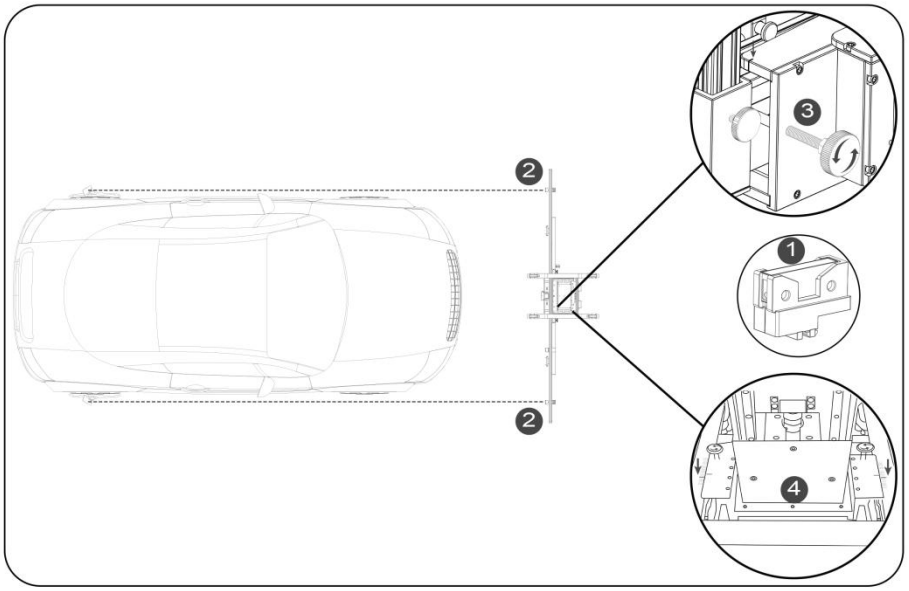

4. Perform fine tuning adjustment via the fine tuning knob for left and right fine tuning ①, while ensuring the center laser LAC09-02 illuminate the center of the vehicle.

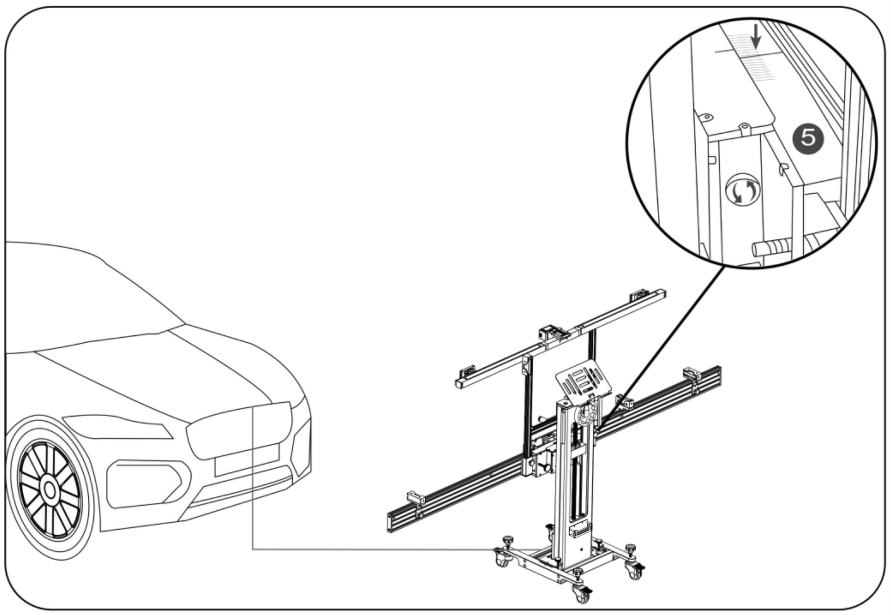

[Step 5] Install the ACC radar reflector and adjust the level position

1. Remove the center laser LAC09-02 and install the ACC radar reflector LAM05-02.
2. Adjust the position of the ACC radar reflector LAM05-02 to position 2.
3. Monitor the spirit level ① on the ACC radar reflector. If necessary, adjust the single wheel on one side to unlock and adjust the level position.

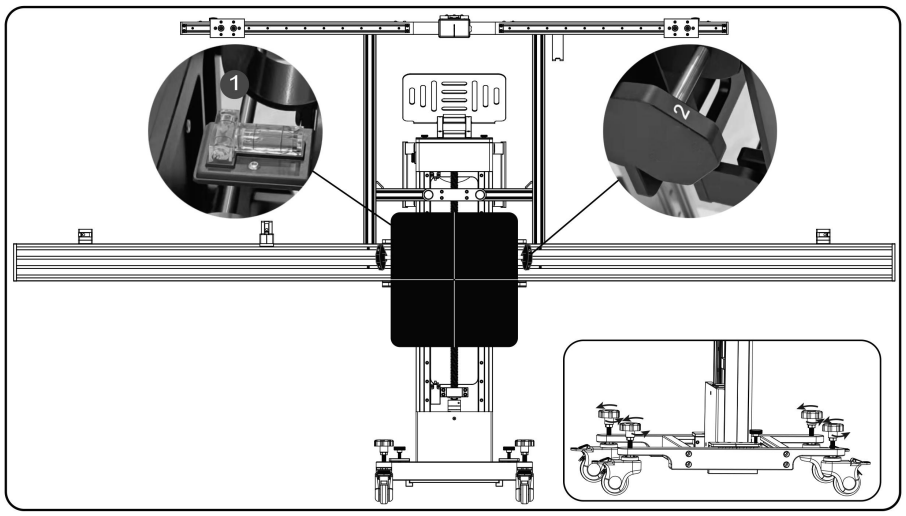

[Step 6] Adjust the height

1.Turn on the laser beam of the mounting plate LAC09-03.

2.Adjust the height of X-431 ADAS PRO+ so that the laser spot illuminates the center of radar sensor.

Note: In the case of the radar sensor with a mirror, the laser point is required to be illuminated on the position of the mirror of radar sensor, and ensure that the laser rays can be reflected back to the center of ACC reflector.

[Step 7] Adjust the angle

1.Adjust the ACC radar reflector LAM05-02 to position 1.

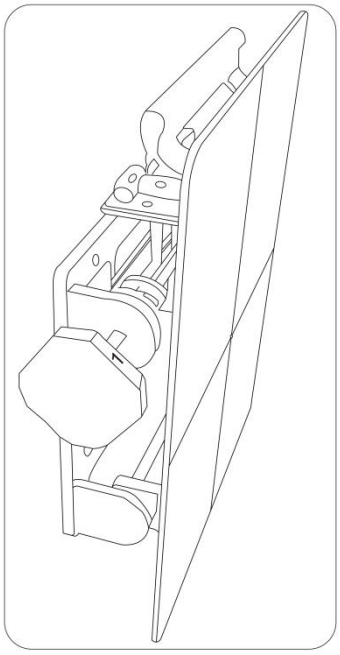

2.Adjust the ACC radar reflector LAM05-02 to position 2.

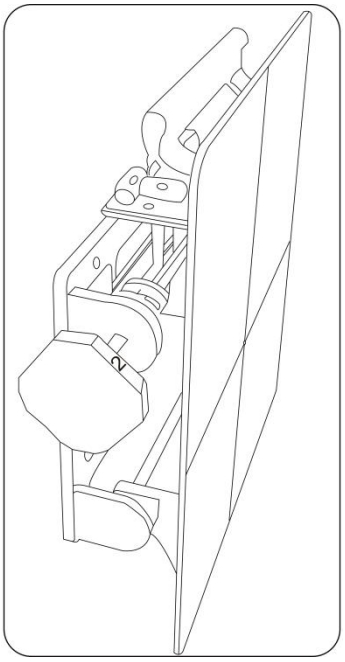

3.Adjust the ACC radar reflector LAM05-02 to position 3.

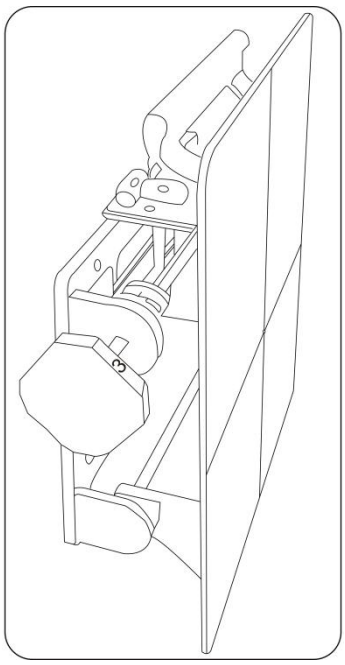

[Step 8] Adjust the direction of ACC radar sensor

If it is required to adjust the sensor position, please use the adjustment screw to adjust the two adjustment bolts by following the software prompts, and perform the operations of [Step 7] again. If no adjustment is needed, skip this step.

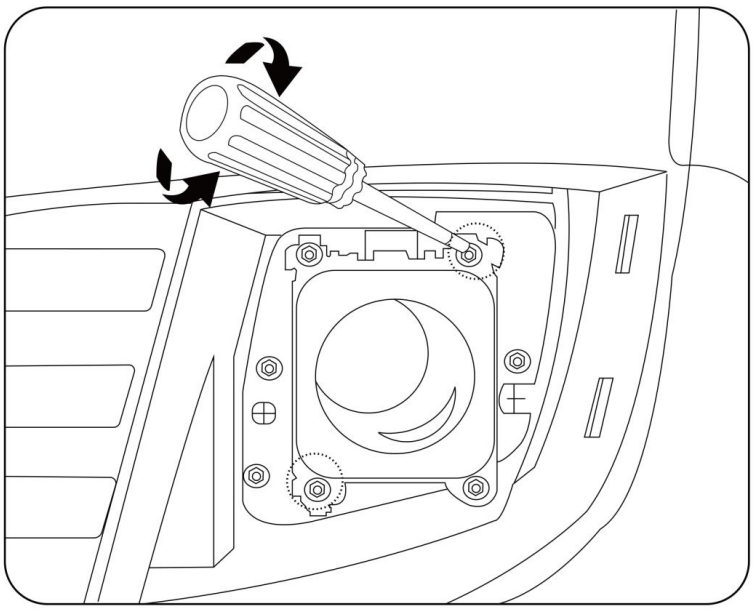

[Step 9] Calibration completed

Save the ADAS report after the calibration completed. It is recommended to scan the system again after the calibration completed to confirm that the fault has been resolved.

5. Service and Maintenance

- Be careful when operating each accessory of the ADAS calibration tool.
- Use acid- and resin-free grease or oil to wipe the movable components regularly.
- Clean the ADAS calibration tool regularly with a mild detergent.
- If you use a standard household cleaner, spray it on a damp towel.
- If any component is damaged, please use the original replacement component to replace it immediately.

Appendix: Optional Calibration Targets

1.LDW Targets

No.	Target Name	Target No.	Reference Image	Quantity
1	Mercedes LDW Target	LAM01-01	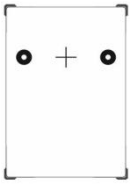	1
2	Honda LDW Target	LAM01-04-L	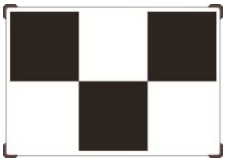	1
3	Honda LDW Target	LAM01-04-R	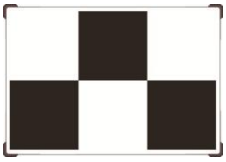	1
4	Toyota LDW Target	LAM01-06-1		1
5	Toyota LDW Target	LAM01-06-2		1
6	Toyota LDW Target	LAM01-06-3		1

7	Nissan LDW Target	LAM01-07-L	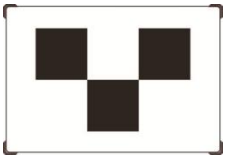	1
8	Nissan LDW Target	LAM01-07-R	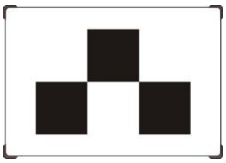	1
9	Hyundai/Kia LDW Target	LAM01-09	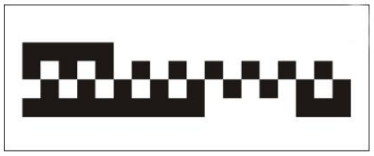	1
10	Mazda LDW Target	LAM01-10	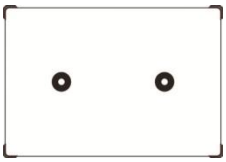	1
11	Romeo LDW Target	LAM01-11	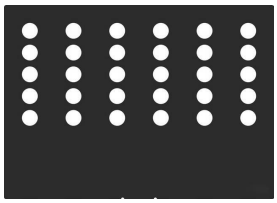	1
12	Nissan/Renault LDW Target	LAM01-12-L		1
13	Nissan/Renault LDW Target	LAM01-12-R		1

14	Hyundai/Kia LDW Target	LAC01-13		1
15	Subaru LDW Target	LAM01-15		1
16	Mazda LDW Target	LAM01-16-L	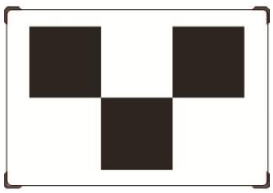	1
17	Mazda LDW Target	LAM01-16-R	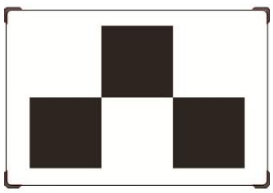	1
18	Honda LDW Target	LAM01-17		1
19	Suzuki LDW Target	LAM01-18-L		1

20	Suzuki LDW Target	LAM01-18-R		1
21	Mitsubishi LDW Target	LAM01-19-L		1
22	Mitsubishi LDW Target	LAM01-19-R	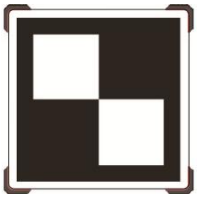	1
23	Honda LDW Target	LAM01-20		1
24	Subaru LDW Target	LAM01-21	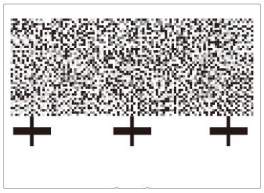	1
25	Sprinter LDW Target	LAM01-23-L	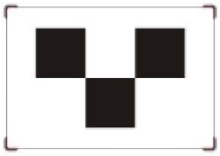	1

26	Sprinter LDW Target	LAM01-23-R	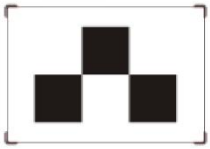	1
27	Suzuki LDW Target	LAM01-25	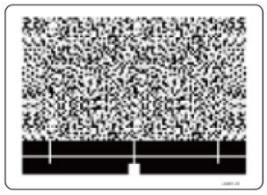	1
28	Target Extension Rod	LAM09-08		1
29	Target Extension Rod	LAM09-09		1

2.Radar Targets

No.	Target Name	Target No.	Reference Image	Quantity
1	ACC Radar Target (including mounting plate)	ACC Reflector LAM05-02	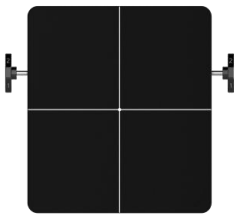	1

2		Mounting Plate LAC09-03		1
3	Corner Reflector	LAC05-03		1
4	Doppler Simulator	LAC05-04		1
5	VW/Audi Lidar Target	LAC05-06		1

3.RCW & AVM Targets (Asian)

No.	Target name	Target No.	Reference Image	Quantity
1	Honda AVM Target	LAC04-01		4

		LAC04-02		1
2	Nissan RCW Target	LAC04-11	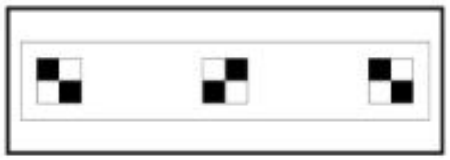	1
3	Hyundai AVM Target	LAC04-12-01	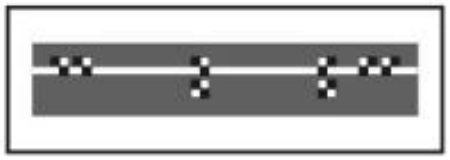	1
		LAC04-12-02		1
4	Mitsubishi AVM Target	LAC04-13	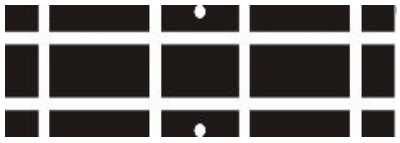	2
5	Nissan RCW Target	LAC04-15	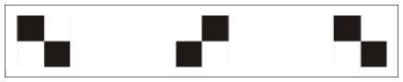	1
6	Toyota AVM Target	LAC04-16-1		4
		LAC04-16-2		6
		LAC04-16-3		2

		LAC04-16-4		2
7	Honda Lane Watch Target	LAC04-17	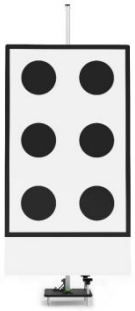	1
8	Nissan RCW Target	LAC04-24	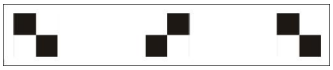	1
9	Toyota RCW Target	LAC04-25	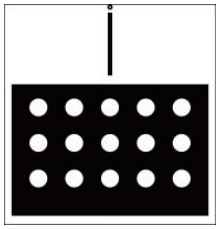	1

4.RCW & AVM Targets (American)

No.	Target Name	Target No.	Reference Image	Quantity
1	Cadillac AVM Target	LAC04-06		1
2	Ford AVM Target	LAC04-07		2

5.RCW & AVM Targets (European)

No.	Target name	Target No.	Reference Image	Quantity
1	Mercedes RCW Target	LAC02-02		1
2	VW RCW Target	LAC02-03		1
3	VW AVM Target	LAC04-04		2
4	Mercedes RFK Target	LAC04-08-01		1
		LAC04-08-02		1
5	Renault AVM Target	LAC04-10-01		1
		LAC04-10-02	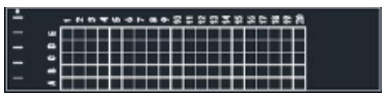	1

6	VW AVM Target	LAC04-14		2
7	Porsche AVM Target	LAC04-05-1		2
		LAC04-05-2		2

6.NVS Targets

No.	Target name	Target No.	Reference Image	Quantity
1	VW NVS Target	LAC06-01		1
2	Mercedes NVS Target	LAC06-02		1

Warranty

THIS WARRANTY IS EXPRESSLY LIMITED TO PERSONS WHO PURCHASE LAUNCH PRODUCTS FOR PURPOSES OF RESALE OR USE IN THE ORDINARY COURSE OF THE BUYER'S BUSINESS.

LAUNCH electronic product is warranted against defects in materials and workmanship for one year from date of delivery to the user.

This warranty does not cover any part that has been abused, altered, used for a purpose other than for which it was intended, or used in a manner inconsistent with instructions regarding use. The exclusive remedy for any automotive meter found to be defective is repair or replacement, and LAUNCH shall not be liable for any consequential or incidental damages.

Final determination of defects shall be made by LAUNCH in accordance with procedures established by LAUNCH. No agent, employee, or representative of LAUNCH has any authority to bind LAUNCH to any affirmation, representation, or warranty concerning LAUNCH automotive meters, except as stated herein.

Disclaimer

The above warranty is in lieu of any other warranty, expressed or implied, including any warranty of merchantability or fitness for a particular purpose.

Purchase Order

Replaceable and optional parts can be ordered directly from your LAUNCH authorized tool supplier. Your order should include the following information:

Order quantity

Part number

Part name

THANK YOU FOR CHOOSING LAUNCH!

If you have any questions or comments please contact:

LAUNCH Tech USA (North America)

Website: www.launchtechusa.com

Product Support

Phone: 877-528-6249 xt: 4

Fax: 562-463-1590

Address: 1820 S. Milliken Ave. Ontario, CA 91761

Monday - Friday 5 am - 5 pm PST

Service & Repair

Phone: 877-528-6249 xt: 5

Monday - Friday 8 am - 5 pm PST

Please visit our public form @

http://launch.activeboard.com

LAUNCH Europe GmbH (Europe)

Phone: +49 (0) 2273 / 98 75 55

Email: service@launch-europe.de

Address: Heinrich-Hertz-Str. 10, D-50170 Kerpen

LAUNCH TECH. CO., LTD. (Other Areas)

Website: www.x431.com

www.cnlaunch.com

Phone: +86 755 8455 7891

Email: overseas.service@cnlaunch.com

Address: Customer Service Department

LAUNCH TECH. CO., LTD.

Launch Industrial Park,

North of Wuhe Avenue,

Banxuegang, Bantian,

Longgang, Shenzhen, Guangdong

P.R.China, 518129

Statement:

LAUNCH reserves the rights to make any change to product designs and specifications without notice. The actual object may differ a little from the descriptions in the manual in physical appearance, color and configuration. We have tried our best to make the descriptions and illustrations in the manual as accurate as possible, and defects are inevitable, if you have any question, please contact local dealer or after-sale service center of LAUNCH, LAUNCH does not bear any responsibility arising from misunderstandings.